Toothed belt axes ELGA-TB

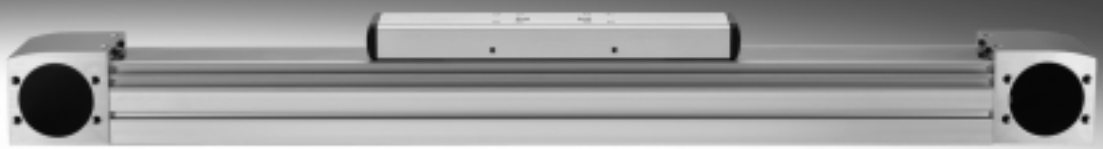

★/☆	Festo core product range Covers 80% of your automation tasks
Worldwide:	Always in stock
Superb:	Festo quality at an attractive price
Easy:	Reduces procurement and storing complexity

★ Ready for dispatch from the Festo factory in 24 hours
Held in stock in 13 service centres worldwide
More than 2200 products

☆ Ready for dispatch in 5 days maximum from stock
Assembled for you in 4 service centres worldwide
Up to 6 x 10^{12} variants per product series

Look for the star!

Electromechanical drives

Selection aid

FESTO

Overview of toothed belt and spindle axes

Toothed belt axes

- Speeds of up to 10 m/s
- Acceleration of up to 50 m/s²
- Repetition accuracy of up to ±0.08 mm
- Strokes of up to 8500 mm (longer strokes on request)
- Flexible motor mounting

Spindle axes

- Speeds of up to 2 m/s
- Acceleration of up to 20 m/s²
- Repetition accuracy of up to ±0.003 mm
- Strokes of up to 3000 mm

Coordinate system

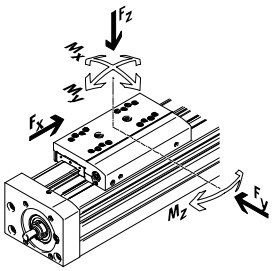

Toothed belt axes

Type	F_x [N]	v [m/s]	Mx [Nm]	My [Nm]	Mz [Nm]	Key features
Heavy-duty recirculating ball bearing guide						
EGC-HD-TB						
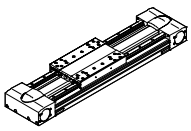	450 1000 1800	3 5 5	140 300 900	275 500 1450	275 500 1450	• Flat drive unit with rigid, closed profile • Precision DUO guide rail with high load capacity • Ideal as a basic axis for linear gantries and cantilever axes
Recirculating ball bearing guide						
EGC-TB-KF						
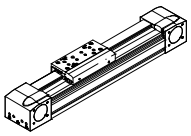	50 100 350 800 2500	3 5 5 5 5	3.5 16 36 144 529	10 132 228 680 1820	10 132 228 680 1820	• Rigid, closed profile • Precision guide rail with high load capacity • Small drive pinions reduce required driving torque • Space-saving position sensing
ELGA-TB-KF						
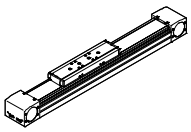	350 800 1300 2000	5 5 5 5	16 36 104 167	132 228 680 1150	132 228 680 1150	• Internal guide and toothed belt • Precision guide rail with high load capacity • Guide and toothed belt protected by cover strip • High feed forces
ELGA-TB-KF-F1						
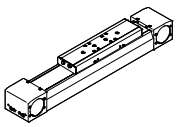	260 600 1000	5 5 5	16 36 104	132 228 680	132 228 680	• Suitable for use in the food zone • “Clean Look”: smooth, easy to clean surfaces • Internal guide and toothed belt • Precision guide rail with high load capacity • Guide and toothed belt protected by cover strip
ELGR-TB						
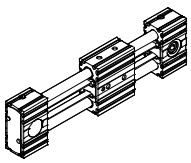	50 100 350	3 3 3	2.5 5 15	20 40 124	20 40 124	• Cost-optimised rod guide • Ready-to-install unit • Ball bearings with high load capacity for dynamic operation

Electromechanical drives

Selection aid

Overview of toothed belt and spindle axes

Toothed belt axes

- Speeds of up to 10 m/s
- Acceleration of up to 50 m/s^2
- Repetition accuracy of up to ±0.08 mm
- Strokes of up to 8500 mm (longer strokes on request)
- Flexible motor mounting

Spindle axes

- Speeds of up to 2 m/s
- Acceleration of up to 20 m/s^2
- Repetition accuracy of up to ±0.003 mm
- Strokes of up to 3000 mm

Coordinate system

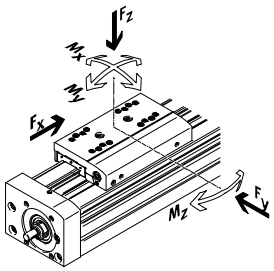

Toothed belt axes

Type	F_x [N]	v [m/s]	Mx [Nm]	My [Nm]	Mz [Nm]	Key features
Roller bearing guide						
ELGA-TB-RF						
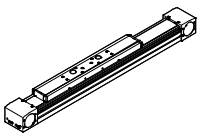	350 800 1300	10 10 10	11 30 100	40 180 640	40 180 640	• Heavy-duty roller bearing guide • Guide and toothed belt protected by cover strip • Speeds of up to 10 m/s • Lower weight than axes with guide rails
ELGA-TB-RF-F1						
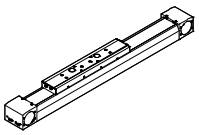	260 600 1000	10 10 10	8.8 24 80	32 144 512	32 144 512	• Suitable for use in the food zone • “Clean Look”: smooth, easy to clean surfaces • Heavy-duty roller bearing guide • Guide and toothed belt protected by cover strip • Lower weight than axes with guide rails
Plain-bearing guide						
ELGA-TB-G						
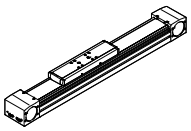	350 800 1300	5 5 5	5 10 120	30 60 120	10 20 40	• Guide and toothed belt protected by cover strip • For simple handling tasks • As a drive component for external guides • Insensitive to harsh operating conditions
ELGR-TB-GF						
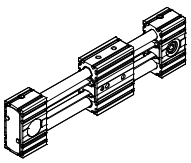	50 100 350	1 1 1	1 2.5 1	10 20 40	10 20 40	• Cost-optimised rod guide • Ready-to-install unit • Heavy-duty plain bearings for use in harsh operating conditions

Electromechanical drives

Selection aid

FESTO

Overview of toothed belt and spindle axes

Toothed belt axes

- Speeds of up to 10 m/s
- Acceleration of up to 50 m/s²
- Repetition accuracy of up to ±0.08 mm
- Strokes of up to 8500 mm (longer strokes on request)
- Flexible motor mounting

Spindle axes

- Speeds of up to 2 m/s
- Acceleration of up to 20 m/s²
- Repetition accuracy of up to ±0.003 mm
- Strokes of up to 3000 mm

Coordinate system

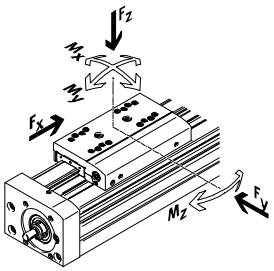

Spindle axes

Type	F_x [N]	v [m/s]	Mx [Nm]	My [Nm]	Mz [Nm]	Key features
Heavy-duty recirculating ball bearing guide						
EGC-HD-BS						
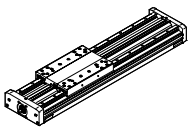	300 600 1300	0.5 1.0 1.5	140 300 900	275 500 1450	275 500 1450	• Flat drive unit with rigid, closed profile • Precision DUO guide rail with high load capacity • Ideal as a basic axis for linear gantries and cantilever axes
Recirculating ball bearing guide						
EGC-BS-KF						
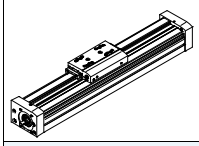	300 600 1300 3000	0.5 1.0 1.5 2.0	16 36 144 529	132 228 680 1820	132 228 680 1820	• Rigid, closed profile • Precision guide rail with high load capacity • For the highest requirements in terms of feed force and accuracy • Space-saving position sensing
ELGA-BS-KF						
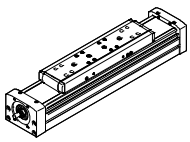	300 600 1300 3000	0.5 1.0 1.5 2.0	16 36 104 167	132 228 680 1150	132 228 680 1150	• Internal guide and ball screw • Precision guide rail with high load capacity • For the highest requirements in terms of feed force and accuracy • Guide and ball screw protected by cover strip • Space-saving position sensing
EGSK						
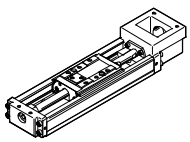	57 133 184 239 392	0.33 1.10 0.83 1.10 1.48	13 28.7 60 79.5 231	3.7 9.2 20.4 26 77.3	3.7 9.2 20.4 26 77.3	• Spindle axes with maximum precision, compactness and rigidity • Recirculating ball bearing guide and ball screw without caged ball bearings • Standard designs in stock
EGSP						
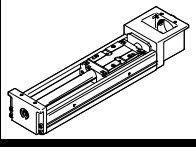	112 212 466 460	0.6 0.6 2.0 2.0	36.3 81.5 90.3 258	12.5 31.6 32.1 94	12.5 31.6 32.1 94	• Spindle axes with maximum precision, compactness and rigidity • Recirculating ball bearing guide with caged ball bearings • Ball screw sizes 33, 46 with caged ball bearings

Toothed belt axes ELGA-TB

Key features

At a glance

ELGA-TB-KF/-KF-F1 – Recirculating ball bearing guide

- Internal, precision recirculating ball bearing guide with high load capacity for high torque loads
- Stainless steel cover strip provides basic protection for guide and toothed belt
- Suitable for use in the food zone (ELGA-...-F1)
- Easy maintenance thanks to easily accessible lubrication connections
- One additional slide can be selected

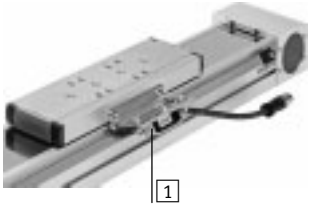

1 Displacement encoder (optional)
The position of the slide can be sensed directly when using the incremental displacement encoder. This means that all elasticities of the drive train can be detected and can be corrected by the motor controller (➔ page 15)

ELGA-TB-RF/-RF-F1 – Roller bearing guide

- For high acceleration and speeds
- Guide backlash = 0 mm
- Very good operating performance under torque load
- Suitable for use in the food zone (ELGA-...-F1)
- Heavy-duty alternative to the recirculating ball bearing guide
- Actuator for external guides, especially with high speeds

ELGA-TB-G – Plain-bearing guide

- For small and medium loads
- Low guide backlash
- Actuator for external guides
- For simple handling tasks

Sealing air connections

1 Sealing air connections

- Application of vacuum prevents abraded particles from being released into the environment
- Application of gauge pressure prevents dirt from getting into the axis

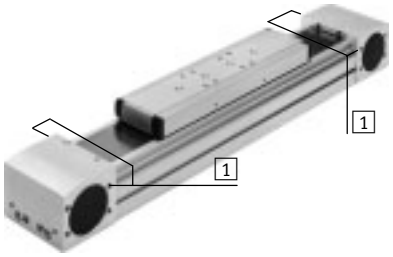

Flexible motor connection

The motor position can be freely selected on 4 sides and can be changed at any time.

Toothed belt axes ELGA-TB

Key features

Complete system comprising toothed belt axis, motor, motor controller and motor mounting kit

Motor ➔ page 100

1 Servo motor EMME-AS, EMMS-AS
2 Stepper motor EMMS-ST

Note

A range of specially adapted complete solutions is available for the toothed belt axis ELGA and the motors.

Motor controller Technical data ➔ Internet: motor controller

1 Servo motor controller CMMP-AS
2 Stepper motor controller CMMS-ST

Motor attachment set ➔ page 100

Axial kit

Kit comprising:
- Motor flange
- Coupling housing
- Coupling
- Screws

Toothed belt axes ELGA-TB

Key features

Characteristic values of the axes

The specifications shown in the table are maximum values.
The precise values for each of the variants can be found in the relevant technical data.

Version	Size	Working stroke [mm]	Speed [m/s]	Repetition accuracy [mm]	Feed force [N]	Guide characteristics: Forces and torques Fy [N]	Fz [N]	Mx [Nm]	My [Nm]	Mz [Nm]	➔ Page/ Internet
ELGA-TB-KF – Recirculating ball bearing guide											
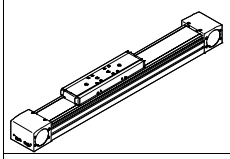	70	50 … 5000	5	±0.08	350	1500	1850	16	132	132	10
	80	50 … 8500	5	±0.08	800	2500	3050	36	228	228	
	120	50 … 8500	5	±0.08	1300	5500	6890	104	680	680	
	150	50 … 7000	5	±0.08	2000	11000	11000	167	1150	1150	
ELGA-TB-KF-F1 – Recirculating ball bearing guide, suitable for use in the food zone											
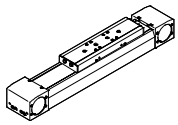	70	50 … 5000	5	±0.08	260	1500	1850	16	132	132	30
	80	50 … 8500	5	±0.08	600	2500	3050	36	228	228	
	120	50 … 8500	5	±0.08	1000	5500	6890	104	680	680	
ELGA-TB-RF – Roller bearing guide											
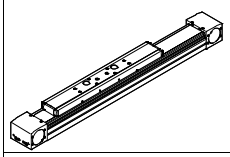	70	50 … 7000	10	±0.08	350	500	500	11	40	40	48
	80	50 … 7000	10	±0.08	800	800	800	30	180	180	
	120	50 … 7400	10	±0.08	1300	2000	2000	100	640	640	
ELGA-TB-RF-F1 – Roller bearing guide, suitable for use in the food zone											
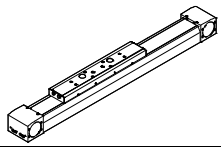	70	50 … 7000	10	±0.08	260	400	400	8.8	32	32	66
	80	50 … 7000	10	±0.08	600	640	640	24	144	144	
	120	50 … 7400	10	±0.08	1000	1600	1600	80	512	512	
ELGA-TB-G – Plain-bearing guide											
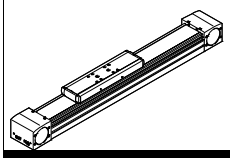	70	50 … 8500	5	±0.08	350	80	400	5	30	10	84
	80	50 … 8500	5	±0.08	800	200	800	10	60	20	
	120	50 … 8500	5	±0.08	1300	380	1600	20	120	40	

Note

PositioningDrives
engineering software
www.festo.com

Toothed belt axes ELGA-TB

Key features

System product for handling and assembly technology

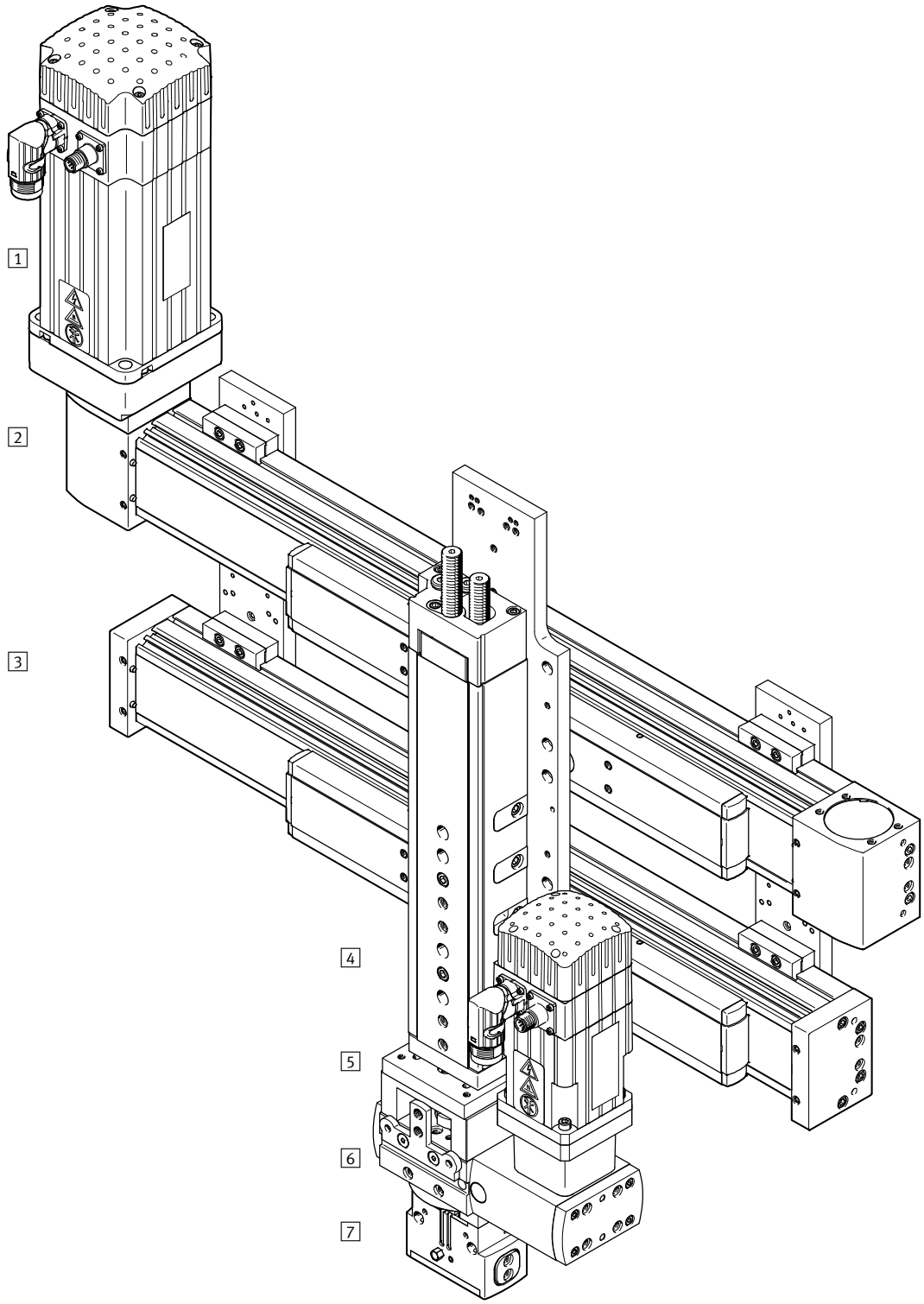

System components and accessories			
		Description	➔ Internet
1	Motors	Servo and stepper motors, with or without gear unit	motor
2	Axes	Wide range of combinations possible within handling and assembly technology	axis
3	Guide axes	For supporting force and torque capacity in multi-axis applications	guide axis
4	Drives	Wide range of combinations possible within handling and assembly technology	drive
5	Adapters	For drive/drive and drive/gripper connections	gripper
6	Semi-rotary drives	Wide range of variations possible within handling and assembly technology	semi-rotary drive
7	Grippers	Wide range of variations possible within handling and assembly technology	gripper

Toothed belt axes ELGA-TB-KF, with recirculating ball bearing guide

Peripherals overview

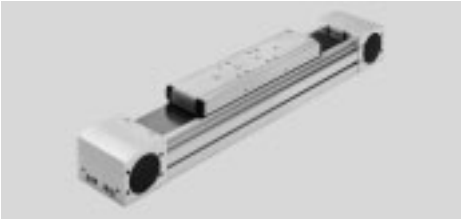

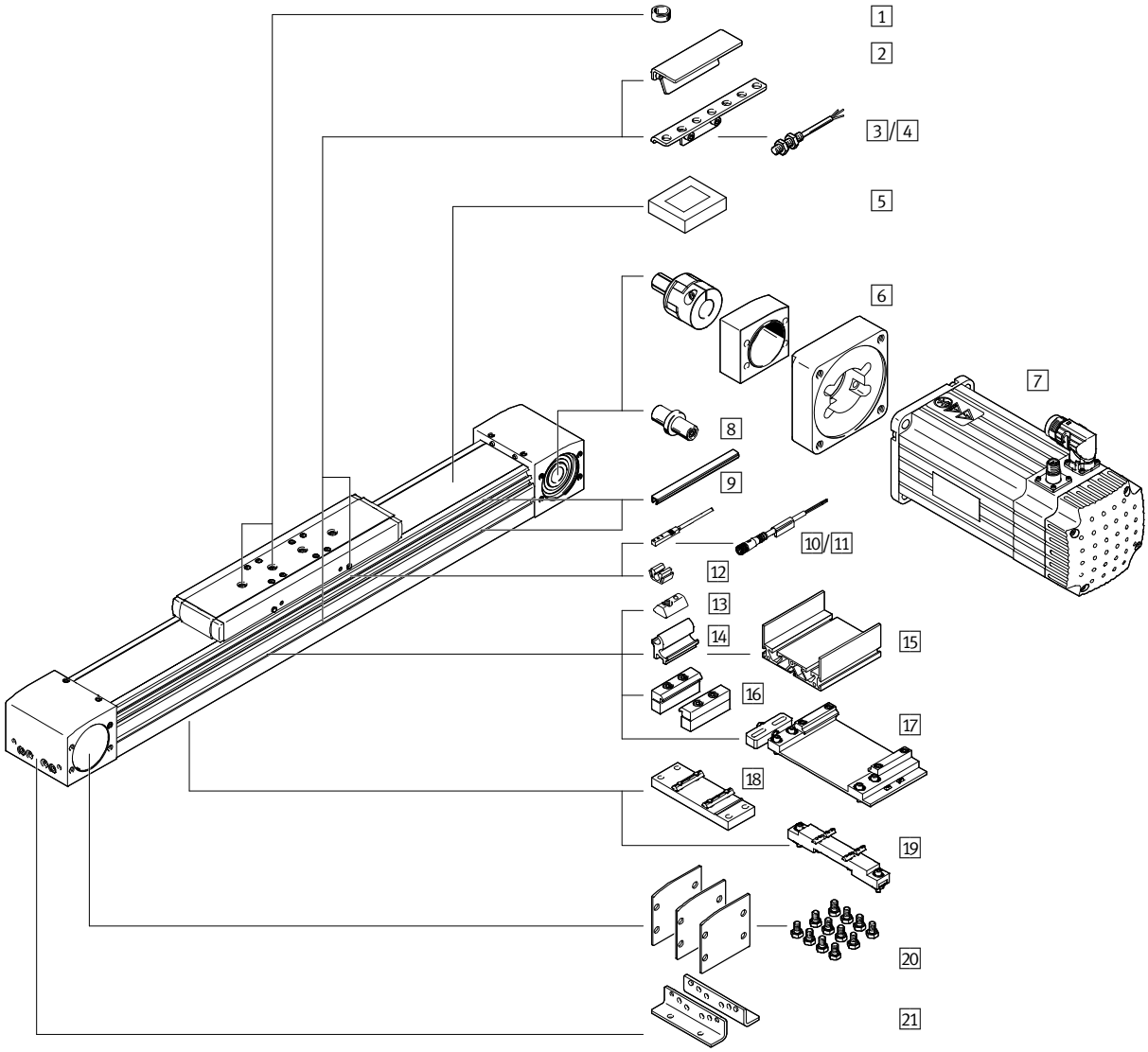

Toothed belt axes ELGA-TB-KF, with recirculating ball bearing guide

Peripherals overview

Accessories			
	Type/order code	Description	➔ Page/Internet
1	Centring pin/sleeve ZBS, ZBH	• For centring loads and attachments on the slide • 2 centring pins/sleeves included in the scope of delivery of the axis	113
2	Switch lug SF-EGC	For sensing the slide position	110
3	Sensor bracket HWS-EGC	For mounting the inductive proximity sensors (round design) on the axis	111
4	Proximity sensor, M8 SIEN-M8	Inductive proximity sensor, round design	115
5	Clamping component EADT	Tool for retensioning the cover strip	113
6	Axial kit EAMM	For axial motor mounting (comprises: coupling, coupling housing and motor flange)	100
7	Motor EMME, EMMS	Motors specially matched to the axis, with or without gear unit, with or without brake	100
8	Drive shaft EAMB	• Can, if required, be used as an alternative interface • No drive shaft is required for the axis/motor combinations ➔ page 100	104
9	Slot cover ABP	For protection against contamination	113
10	Proximity sensor, T-slot SIES-8M	• Inductive proximity sensor, for T-slot • The order code SA, SB includes 1 switch lug in the scope of delivery	114
11	Connecting cable NEBU, SIM	For proximity sensor	115
12	Clip SMBK	For mounting the proximity sensor cable in the slot	113
13	Slot nut NST	For mounting attachments	113
14	Adapter kit DHAM	For mounting the support profile on the axis	114
15	Support profile HMIA	For mounting and guiding an energy chain	114
16	Profile mounting MUE	For mounting the axis on the side of the profile	106
17	Adjusting kit EADC-E16	Used to mount the axis on a vertical surface. Following mounting, the axis can be aligned horizontally	109
18	Central support EAHF-L5	For mounting the axis from underneath on the profile	107
19	Adjusting kit EADC-E15	It is height-adjustable. Can be used to compensate any unevenness in the bearing surface	108
20	Cover kit EASC-L5	For covering the sides of the drive cover	113
21	Foot mounting HPE	• For mounting the axis on the end cap • With higher forces and torques, the axis should be mounted using the profile	105

Toothed belt axes ELGA-TB-KF, with recirculating ball bearing guide

Type codes

ELGA	–	TB	–	KF	–	70	–	800	–	20H	–	

Type	
ELGA	Toothed belt axis

Drive function	
TB	Toothed belt

Guidance	
KF	Recirculating ball bearing guide

Size

Stroke [mm]

Stroke reserve

Additional slide	
–	None
ZL	1 slide on left
ZR	1 slide on right

Toothed belt axes ELGA-TB-KF, with recirculating ball bearing guide

Type codes

➔ – [ ] [ ] – [ ]

Displacement encoder, incremental	
–	None
-M1	Resolution 2.5 µm
-M2	Resolution 10 µm

Displacement encoder attachment position	
–	None
B	Rear
F	Front

Operating instructions	
–	With operating instructions
DN	Without operating instructions

Toothed belt axes ELGA-TB-KF, with recirculating ball bearing guide

Technical data

Function

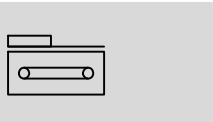

Size
70 … 150

Stroke length
50 … 8500 mm

www.festo.com

General technical data					
Size		70	80	120	150
Design		Electromechanical axis with toothed belt			
Guide		Recirculating ball bearing guide			
Mounting position		Any			
Working stroke	[mm]	50 … 5000	50 … 8500	50 … 8500	50 … 7000
Max. feed force F_x	[N]	350	800	1300	2000
Max. no-load torque[1)]	[Nm]	0.6	1	2.8	4
Max. no-load resistance to shifting[1)]	[N]	41.9	50.3	76.2	108.3
Max. driving torque	[Nm]	5.02	15.92	34.1	73.85
Max. speed	[m/s]	5			
Max. acceleration	[m/s²]	50			
Repetition accuracy	[mm]	±0.08			

1) At 0.2 m/s

Operating and environmental conditions		
Ambient temperature[1)]	[°C]	–10 … +60
Degree of protection		IP40
Duty cycle	[%]	100

1) Note operating range of proximity sensors

Weight [kg]				
Size	70	80	120	150
Basic weight with 0 mm stroke[1)]	2.97	4.70	15.68	32.83
Additional weight per 1000 mm stroke	3.94	5.13	10.64	17.22
Moving load				
ELGA-…	0.90	1.90	4.19	7.24
ELGA-…-ZL/ZR	0.74	1.53	3.24	5.84

1) Incl. slide

Toothed belt					
Size		70	80	120	150
Pitch	[mm]	3	5	5	8
Expansion[1)]	[%]	0.213	0.168	0.210	0.269
Effective diameter	[mm]	28.65	39.79	52.52	73.85
Feed constant	[mm/rev]	90	125	165	232

1) At max. feed force

Toothed belt axes ELGA-TB-KF, with recirculating ball bearing guide

Technical data

Mass moment of inertia					
Size		70	80	120	150
J_O	[kg mm²]	243	982	4099	15426
J_H per metre stroke	[kg mm²/m]	19	93	215	586
J_L per kg payload	[kg mm²/kg]	205	396	690	1363
J_W for additional slide	[kg mm²]	186	761	2891	9869

The mass moment of inertia J_A of the entire axis is calculated as follows:

$J_A = J_O + K \times J_W + J_H \times \text{working stroke [m]} + J_L \times m_{payload}$ [kg]

K = Number of additional slides

Materials

Sectional view

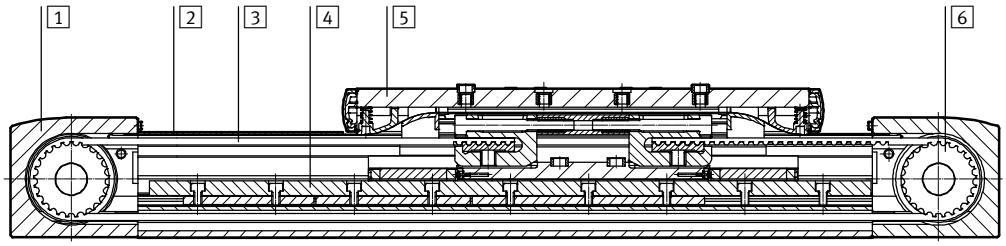

Axis					
Size		70	80	120	150
1	Drive cover	Anodised wrought aluminium alloy			
2	Cover strip	Stainless steel			
3	Toothed belt	Polychloroprene with glass cord and nylon coating			
4	Guide rail	Stainless steel		Tempered steel	
5	Slide	Anodised wrought aluminium alloy			
6	Belt pulley	High-alloy stainless steel			
	Note on materials	RoHS-compliant			
		Contains paint-wetting impairment substances			

Technical data – Displacement encoder			Dimensions ➔ page 26
Type		ELGA-...-M1	ELGA-...-M2
Resolution	[µm]	2.5	10
Max. travel speed with displacement encoder	[m/s]	4	4
Encoder signal		5 V TTL; A/A, B/B; reference signal (N/N) cyclically every 5 mm (zero pulse)	
Signal output		Line driver, alternating, resistant to sustained short circuit	
Electrical connection		8-pin plug connector, round design, M12	
Cable length	[mm]	160	

Operating and environmental conditions – Displacement encoder		
Ambient temperature	[°C]	–10 ... +70
Degree of protection		IP64
CE marking (see declaration of conformity)		To EU EMC Directive[1)]

1) For information about the applicability of the component see the manufacturer's EC declaration of conformity at: www.festo.com/sp ➔ Certificates.
If the component is subject to restrictions on usage in residential, office or commercial environments or small businesses, further measures to reduce the emitted interference may be necessary.

Notes regarding use

The toothed belt axis with displacement encoder is not designed for the following sample applications:

- Magnetic field

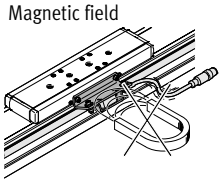

- Welding application

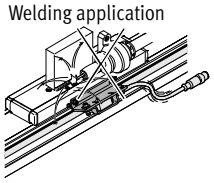

Characteristic load values

The indicated forces and torques refer to the centre of the guide. The point of application of force is the point where the centre of the guide and the longitudinal centre of the slide intersect. These values must not be exceeded during dynamic operation. Special attention must be paid to the cushioning phase.

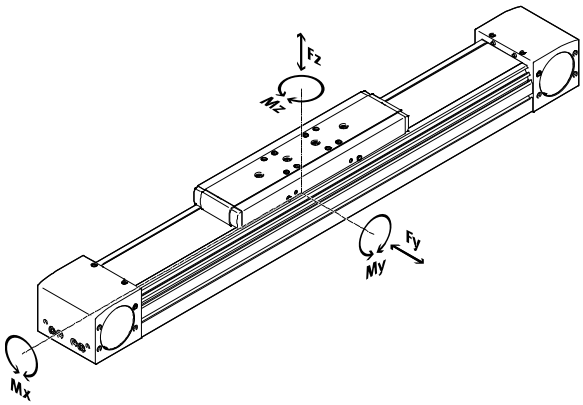

Distance from the slide surface to the centre of the guide

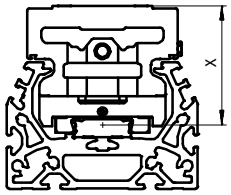

Distance from the slide surface to the centre of the guide					
Size		70	80	120	150
Dimension x	[mm]	37	50	70	86

Max. permissible forces and torques for a service life of 5000 km					
Size		70	80	120	150
$Fy_{max.}$	[N]	1500	2500	5500	11000
Fz_{max}	[N]	1850	3050	6890	11000
$Mx_{max.}$	[Nm]	16	36	104	167
$My_{max.}$	[Nm]	132	228	680	1150
$Mz_{max.}$	[Nm]	132	228	680	1150

Note

For a guiding system service life of 5000 km, the load comparison factor must have a value of fv < 1, based on the maximum permissible forces and torques for a service life of 5000 km.

If the axis is subjected to two or more of the indicated forces and torques simultaneously, the following equation must be satisfied in addition to the indicated maximum loads:

Calculating the load comparison factor:

$$f_v = \frac{|F_{y,dyn}|}{F_{y,max}} + \frac{|F_{z,dyn}|}{F_{z,max}} + \frac{|M_{x,dyn}|}{M_{x,max}} + \frac{|M_{y,dyn}|}{M_{y,max}} + \frac{|M_{z,dyn}|}{M_{z,max}}$$

Calculating the service life

The service life of the guide depends on the load. To provide a rough indication of the service life of the guide, the graph below plots the load comparison factor f_v against the service life.

These values are only theoretical. You must consult your local contact person at Festo for load comparison factors f_v greater than 1.5.

Load comparison factor f_v as a function of service life

Example:
A user wants to move an X kg load. Using the formula ➔ page 16 gives a value of 1.5 for the load comparison factor f_v. According to the graph, the guide would have a service life of approx. 1500 km. Reducing the acceleration reduces the Mz and My values. A load comparison factor f_v of 1 now gives a service life of 5000 km.

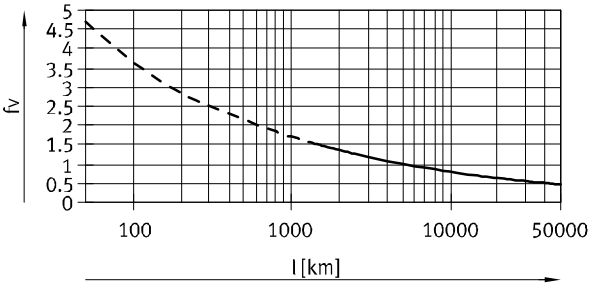

Note

PositioningDrives engineering software www.festo.com

The software can be used to calculate a guide workload for a service life of 5000 km.

$f_v > 1.5$ are only theoretical comparison values for the recirculating ball bearing guide.

Comparison of the characteristic load values for 5000 km with dynamic forces and torques of recirculating ball bearing guides

The characteristic load values of roller guides are standardised to ISO and JIS using dynamic and static forces and torques. These forces and torques are based on an expected guide system service life of 100 km to ISO or 50 km to JIS.
As the characteristic load values are dependent on the service life, the maximum permissible forces and torques for a 5000 km service life cannot be compared with the dynamic forces and torques of roller guides to ISO/JIS.

To make it easier to compare the guide capacity of linear axes ELGA with roller guides, the table below lists the theoretically permissible forces and torques for a calculated service life of 100 km. This corresponds to the dynamic forces and torques to ISO.
These 100 km values have been calculated mathematically and are only to be used for comparing with dynamic forces and torques to ISO. The drives must not be loaded with these characteristic values as this could damage the axes.

Max. permissible forces and torques for a theoretical service life of 100 km (from a guide perspective only)

Size		70	80	120	150
$Fy_{max.}$	[N]	5520	9200	20240	40480
Fz_{max}	[N]	6808	11224	25355	40480
$Mx_{max.}$	[Nm]	59	132	383	615
$My_{max.}$	[Nm]	486	839	2502	4232
$Mz_{max.}$	[Nm]	486	839	2502	4232

Max. acceleration a as a function of payload m

Size 70

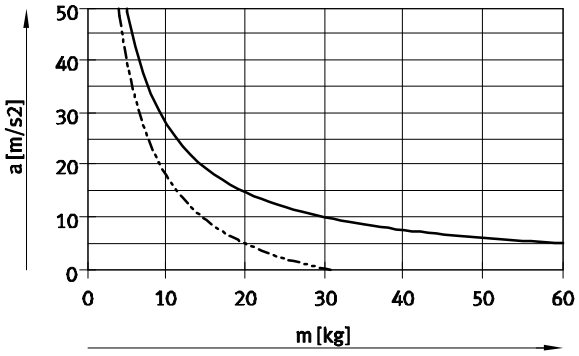

Size 80

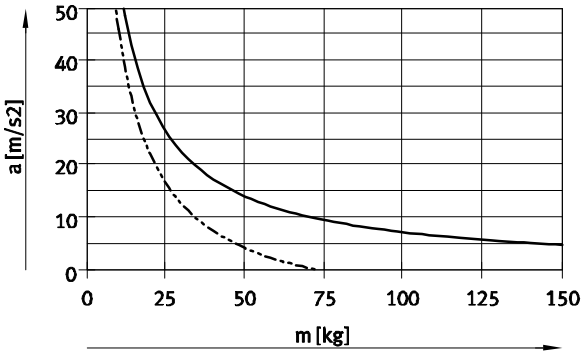

Size 120

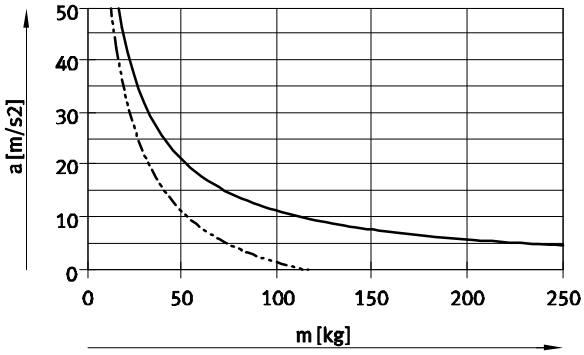

Size 150

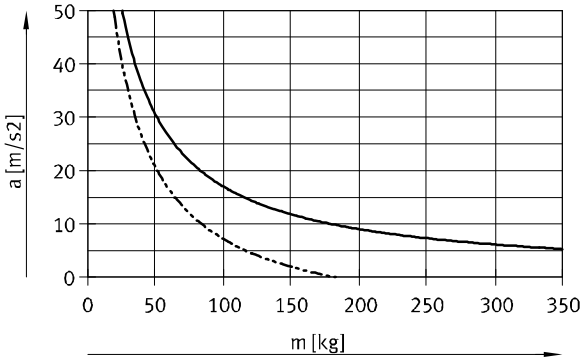

Horizontal

Vertical

Speed v as a function of rotational speed n

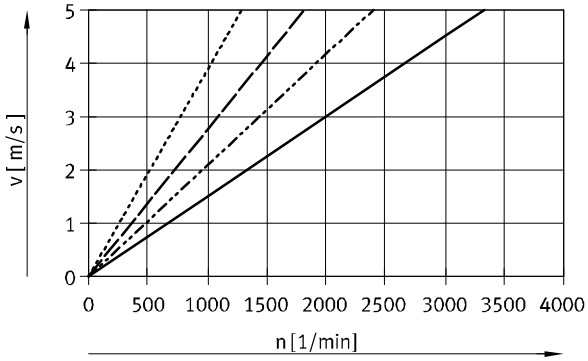

ELGA-TB-KF-70

ELGA-TB-KF-80

ELGA-TB-KF-120

ELGA-TB-KF-150

Theoretical feed force F as a function of input torque M

Size 70

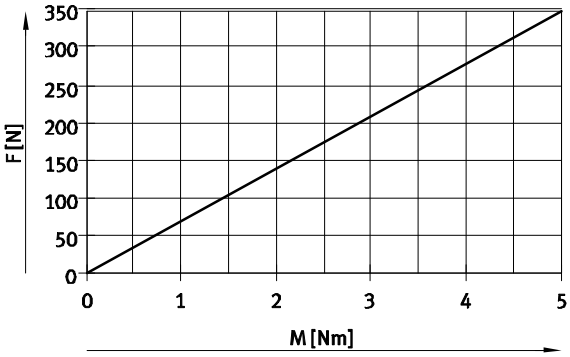

ELGA-TB-KF-70

Size 80/120/150

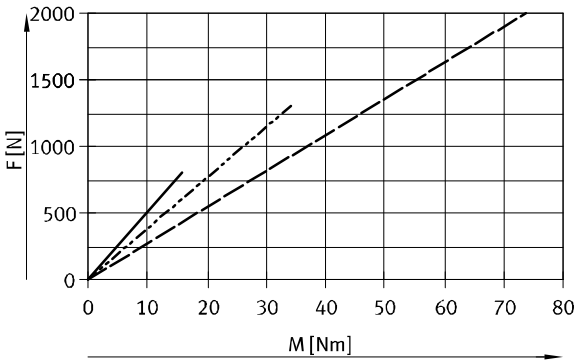

ELGA-TB-KF-80
ELGA-TB-KF-120
ELGA-TB-KF-150

Stroke reserve

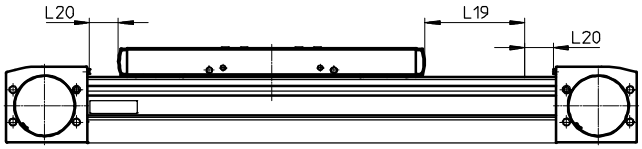

L19 = Nominal stroke
L20 = Stroke reserve

- The stroke reserve is a safety distance which is generally not used as work space
- The sum of the nominal stroke and 2x stroke reserve must not exceed the maximum working stroke
- The stroke reserve length can be freely selected
- The stroke reserve is defined via the "stroke reserve" characteristic in the modular product system.

Example:
Type ELGA-TB-KF-70-500-20H-...
Nominal stroke = 500 mm
2x stroke reserve = 40 mm
Working stroke = 540 mm
(540 mm = 500 mm + 2x 20 mm)

Working stroke reduction

With axis ELGA with additional slide ZL/ZR

With a toothed belt axis with additional slide, the working stroke is reduced by the length of the additional slide and the distance between both slides

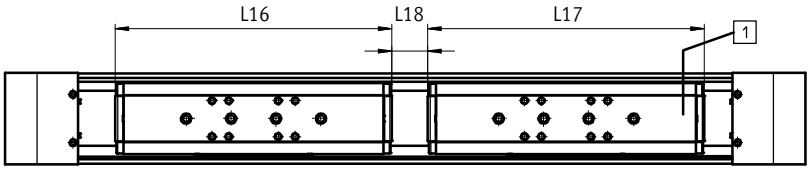

L16 = Slide length
L17 = Additional slide length
L18 = Distance between both slides
1 Additional slide

Example:
Type ELGA-TB-KF-70-500-...-ZR
Working stroke without additional slide = 500 mm
L18 = 50 mm
L16, L17 = 221 mm
Working stroke with additional slide= 229 mm
(500 mm – 50 mm – 221 mm)

Dimensions – Additional slide					
Size		70	80	120	150
Length L17	[mm]	221	246	335	378.4
Min. distance between the slides L18	[mm]	≥ 50	≥ 50	≥ 50	≥ 50

Toothed belt axes ELGA-TB-KF, with recirculating ball bearing guide

Technical data

Second moment of area

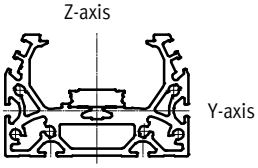

Size		70	80	120	150
Iy	[mm^4]	1.46x10^5	2.57x10^5	1.26x10^6	4.62x10^6
Iz	[mm^4]	4.59x10^5	9.14x10^5	4.37x10^6	12.32x10^6

Maximum permissible support span L (without profile mounting MUE/central support EAHF) as a function of force F

In order to limit deflection in the case of large strokes, the axis may need to be supported.
The following graphs can be used to determine the maximum permissible support span l as a function of force F acting on the axis. The deflection is f = 0.5 mm.

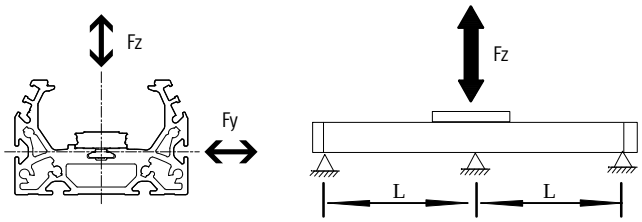

Force Fy

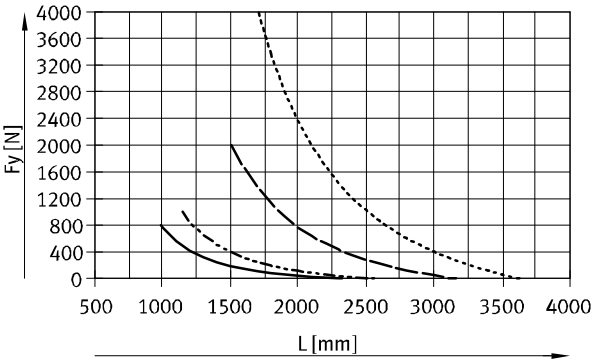

Force Fz

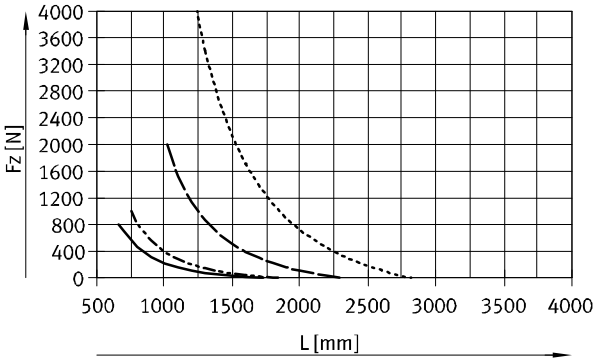

ELGA-TB-KF-70
ELGA-TB-KF-80
ELGA-TB-KF-120
ELGA-TB-KF-150

Recommended deflection limits

Adherence to the following deflection limits is recommended so as not to impair the functional performance of the axes. Greater deformation can result in increased friction, greater wear and reduced service life.

Size	Dyn. deflection (moving load)	Stat. deflection (stationary load)
70 … 150	0.05% of the axis length, max. 0.5 mm	0.1% of the axis length

Central lubrication

The lubrication connections enable the guide and the ball screw of the spindle axis ELGA-BS-KF to be permanently lubricated in applications in humid or wet ambient conditions using semi- or fully automatic relubrication devices.

- The connection options are already available in the standard design of the axes
- There is a dedicated lubrication connection for the spindle nut and the two ball cassettes

Slide dimensions
➔ page 24

Structure of a central lubrication system

A central lubrication system requires various additional components. The illustration shows different options (using a hand pump, pneumatic container pump or electric container pump) required as a minimum for designing a central lubrication system. Festo does not sell these additional components; however, they can be obtained from the following companies:
– Lincoln
– Bielomatik
– SKF (Vogel)
Festo recommends these companies because they can supply all the necessary components.

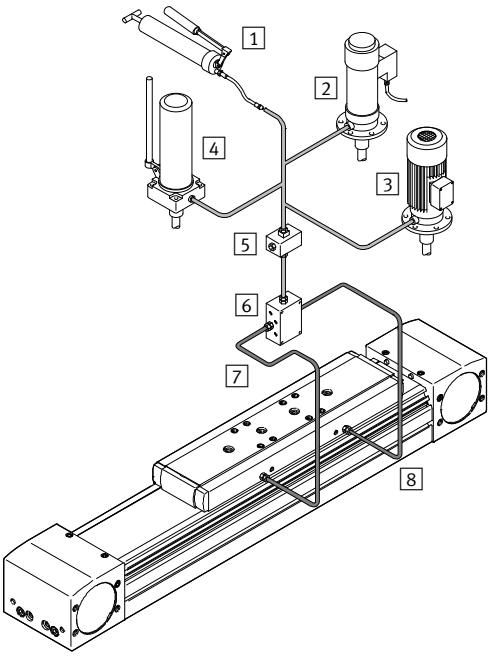

1 Hand pump
2 Pneumatic container pump
3 Electric container pump
4 Manually operated container pump
5 Nipple block
6 Distributor block
7 Tubing or piping
8 Fittings

Dimensions Download CAD data ➔ **www.festo.com**

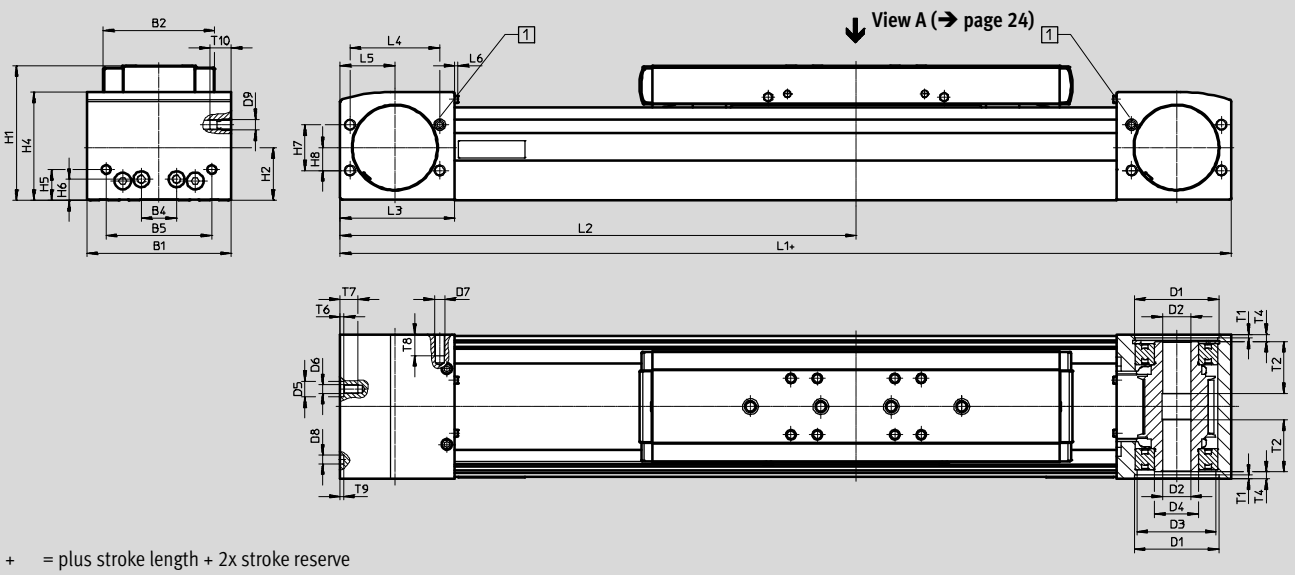

\+ = plus stroke length + 2x stroke reserve

1 Sealing air connections

Size	B1	B2	B4	B5	D1 ∅ H7	D2 ∅ H7	D3 ∅	D4 ∅	D5 ∅ H7	D6	D7
70	69	48.2	30	45	38	16	34	25	–	M5	M6
80	82	63.2	20	60	48	16	45	25	9	M5	M6
120	120	95	80	40	80	23	72	45	–	M8	M8
150	154	125	115	80	95	32	90	60	–	M8	M8

Size	D8 ∅ H7	D9	H1	H2	H4	H5	H6	H7	H8	L1	L2 Min.
70	5	M6	64	26.5	50.8	13	13	24	12	346	173
80	5	M6	76.5	30	61.5	17.5	12	26	13	386	193
120	9	M8	111.5	45	91	22	22	59	32	546	273
150	9	M8	141.5	58.6	121	26.5	26.5	80	40	712	356

Size	L3	L4	L5	L6	T1	T2	T4	T6	T7	T8	T9	T10
70	57.5	42	27.5	2.3	2.1	18	7.2	–	10	12	3.1	12
80	65	51	31	2.3	2.1	29.5	4	2.1	10.1	12	2	12
120	100	76	50	2.5	3.1	29.5	4	–	16	16	2.1	16
150	140	80	70	2.5	2.8	32	4	–	18	17	2.1	17

Dimensions Download CAD data ➔ **www.festo.com**

Profile

Width 70

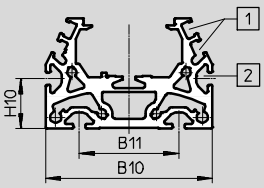

Size 80

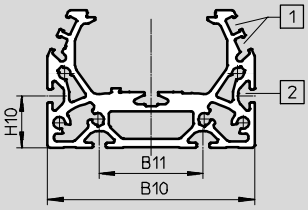

Size 120

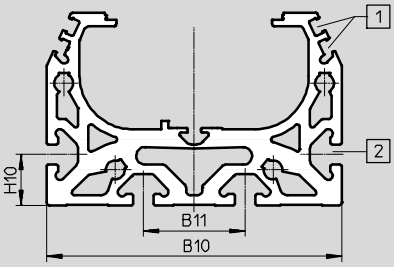

Size 150

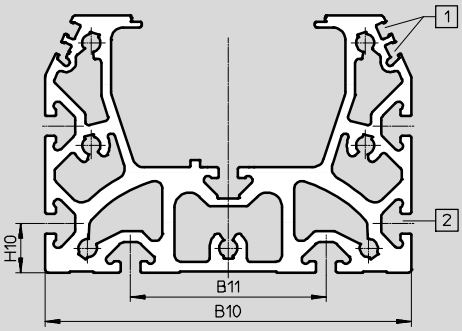

1 Sensor slot for proximity sensor
2 Mounting slot for slot nut:
for size 70, 80: slot nut NST-5-M5
for size 120, 150: slot nut NST-8-M6

Note

Requirements for the flatness of the bearing surface and of attachments as well as for use in parallel structures
➔ www.festo.com/sp User documentation

Size	B10	B11	H10
70	67	40	20
80	80	40	20
120	116	40	20
150	150	80	20

Dimensions Download CAD data ➔ **www.festo.com**

Slide

Size 70

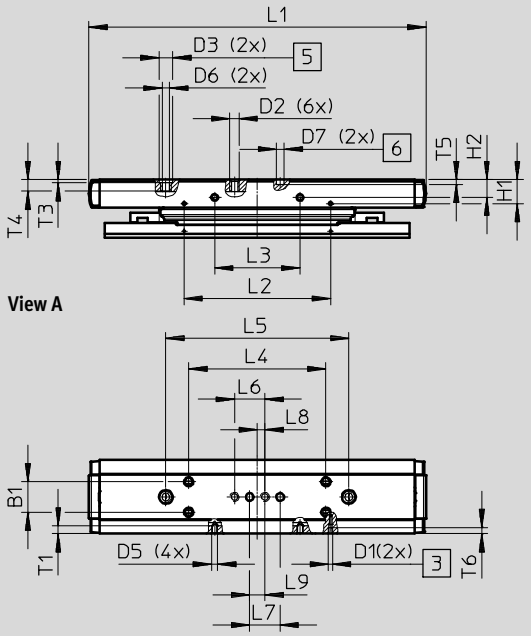

Size 80

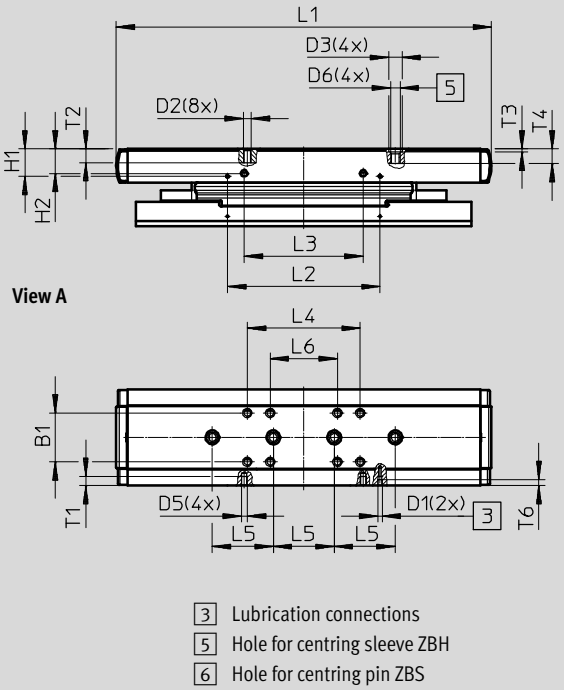

3 Lubrication connections
5 Hole for centring sleeve ZBH
6 Hole for centring pin ZBS

Size	B1 ±0.1	D1	D2	D3 ∅ H7	D5	D6	D7 ∅ H7	H1 ±0.1	H2 ±0.1	L1	L2 ±0.1	L3 ±0.1
70	20	M6	M5	9	M4	M6	5	14.2	11.7	221	96	56
80	32	M6	M5	9	M4	M6	–	16.6	16	246	101.4	78

Size	L4 ±0.1	L5 ±0.03	L6 ±0.1	L7 ±0.03	L8	L9 ±0.1	T1	T2	T3 +0.1	T4	T5 ±0.1	T6 Min.	T6 Max.
70	90	120	20	20	5	10	5.1	–	2.1	7.5	3.1	4.2	$4.6_{-0.1}$
80	74	40	44	–	–	–	6	9	2.1	$9.7_{-0.2}$	–	5.6	$5.9_{-0.1}$

Dimensions Download CAD data ➔ **www.festo.com**

Slide

Size 120

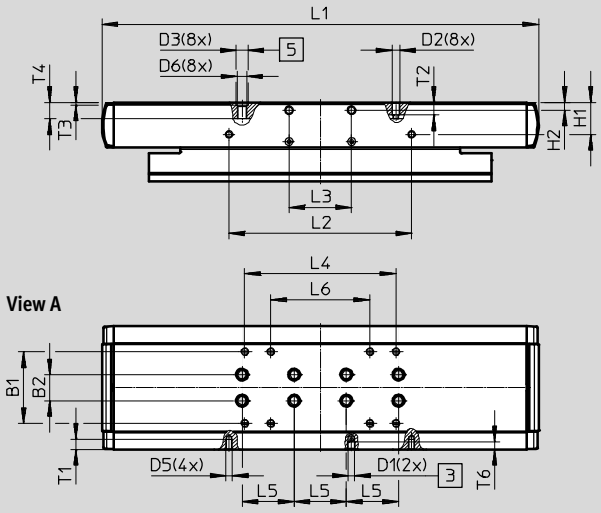

Size 150

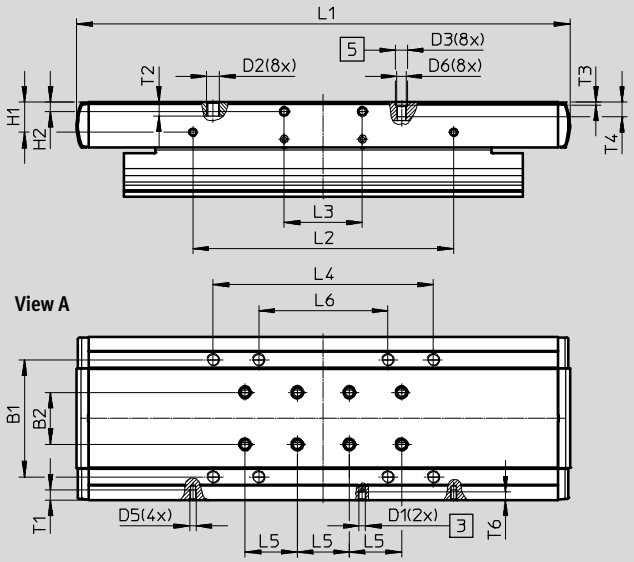

3 Lubrication connections
5 Hole for centring sleeve ZBH

Size	B1 ±0.1	B2 ±0.03	D1	D2	D3 ∅ H7	D5	D6	H1 ±0.1	H2	L1
120	55	20	M6	M5	9	M5	M6	24.5	6	335
150	90	40	M6	M8	9	M5	M6	23	$7_{\pm 0.1}$	378.4

Size	L2 ±0.1	L3 ±0.1	L4 ±0.1	L5 ±0.03	L6 ±0.1	T1	T2	T3 +0.1	T4	T6
120	140	48	116	40	76	8	9.7	2.1	$12.6_{-0.3}$	6
150	200	60	169	40	99	7.5	10.7	2.1	11	7

Dimensions Download CAD data ➔ **www.festo.com**

ELGA-...-M1/M2 – With incremental displacement encoder

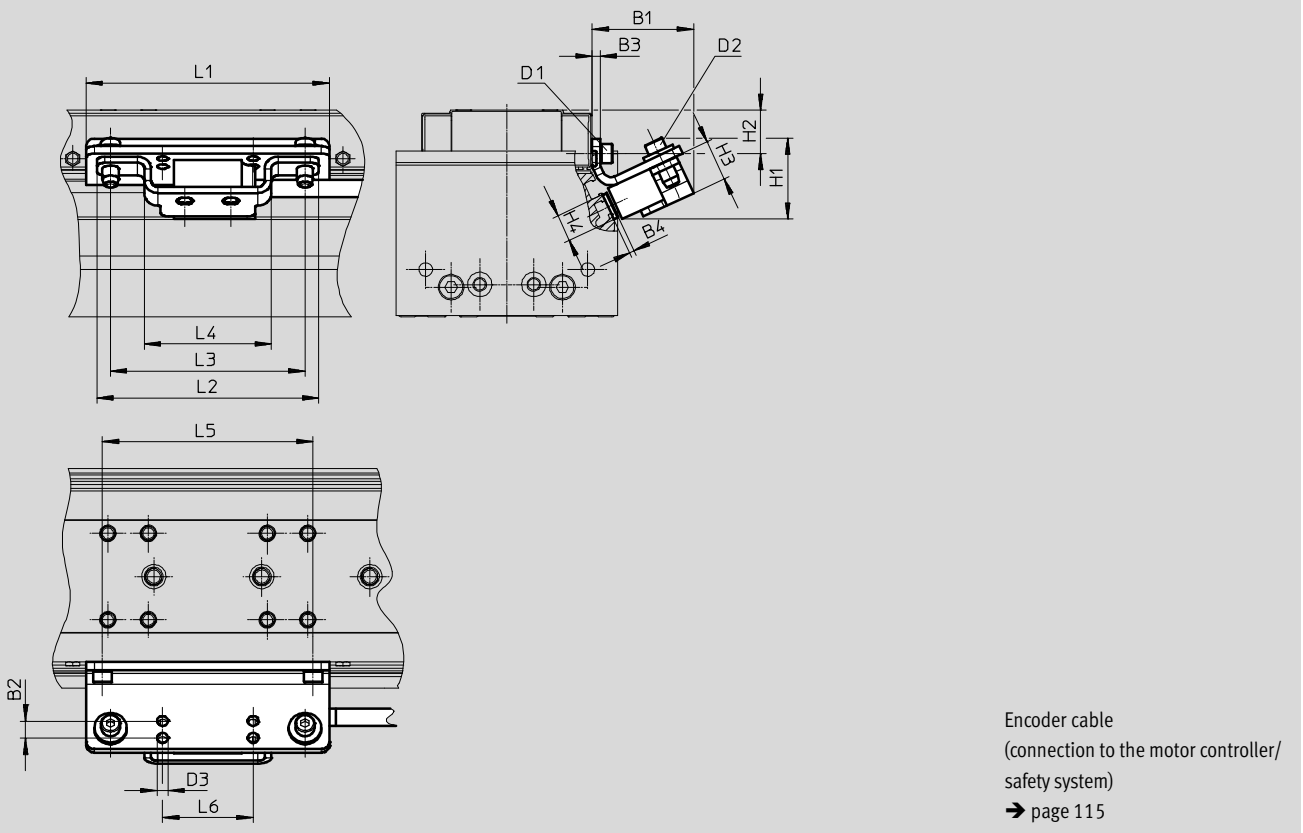

Size	B1	B2	B3	B4	D1	D2	D3 ∅	H1	H2
70	40	7	3	1.8	M4x8	M4x14	4	35	11.7
80	40	7	3	1.8	M4x14	M4x14	4	35	16
120	41	7	3	1.8	M4x14	M4x14	4	35	24.5
150	42	7	3	1.8	M5x10	M4x14	4	35	23

Size	H3	H4	L1	L2	L3	L4	L5	L6
70	15	10	86	82	72	47	56	33.5
80	15	10	90	82	72	47	78	33.5
120	15	10	170	82	72	47	140	33.5
150	15	10	220	82	72	47	200	33.5

☆ Core product range

Ordering data

Features:
- Stroke reserve: 0 mm
- Standard slide

Size	Stroke [mm]	Part No.	Type
70	300	☆ **8041851**	**ELGA-TB-KF-70-300-0H**
	400	☆ **8041852**	**ELGA-TB-KF-70-400-0H**
	500	☆ **8041853**	**ELGA-TB-KF-70-500-0H**
	600	☆ **8041854**	**ELGA-TB-KF-70-600-0H**
	800	☆ **8041855**	**ELGA-TB-KF-70-800-0H**
	1000	☆ **8041856**	**ELGA-TB-KF-70-1000-0H**
	1200	☆ **8041857**	**ELGA-TB-KF-70-1200-0H**
80	400	☆ **8041858**	**ELGA-TB-KF-80-400-0H**
	500	☆ **8041859**	**ELGA-TB-KF-80-500-0H**
	600	☆ **8041860**	**ELGA-TB-KF-80-600-0H**
	800	☆ **8041861**	**ELGA-TB-KF-80-800-0H**
	1000	☆ **8041862**	**ELGA-TB-KF-80-1000-0H**
	1200	☆ **8041863**	**ELGA-TB-KF-80-1200-0H**
120	400	☆ **8041864**	**ELGA-TB-KF-120-400-0H**
	500	☆ **8041865**	**ELGA-TB-KF-120-500-0H**
	600	☆ **8041866**	**ELGA-TB-KF-120-600-0H**
	800	☆ **8041867**	**ELGA-TB-KF-120-800-0H**
	1000	☆ **8041868**	**ELGA-TB-KF-120-1000-0H**
	1200	☆ **8041869**	**ELGA-TB-KF-120-1200-0H**
	1500	☆ **8041870**	**ELGA-TB-KF-120-1500-0H**

Toothed belt axes ELGA-TB-KF, with recirculating ball bearing guide

Ordering data – Modular product system

Orientation guide

O top
U underneath
R right
L left
V front
H rear

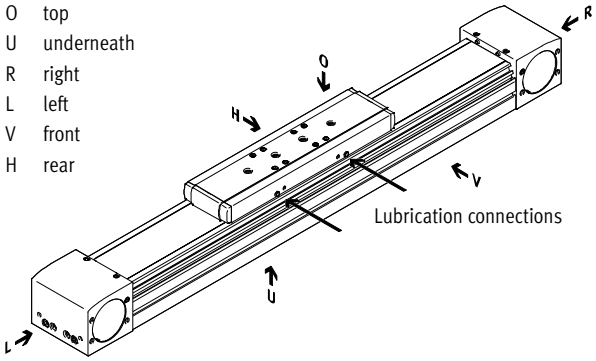

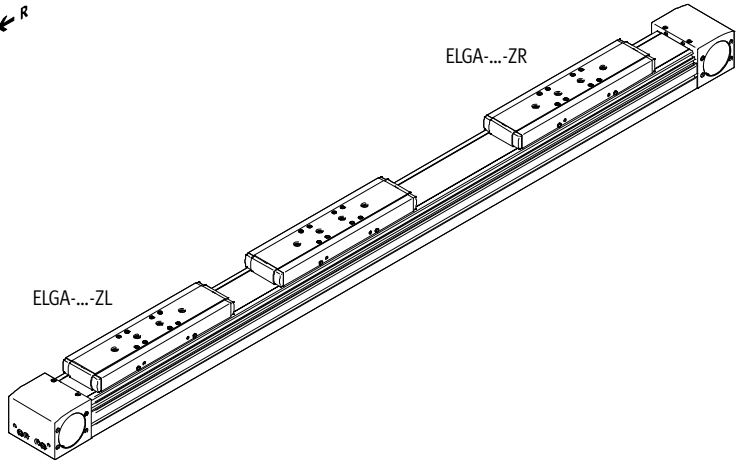

Accessories

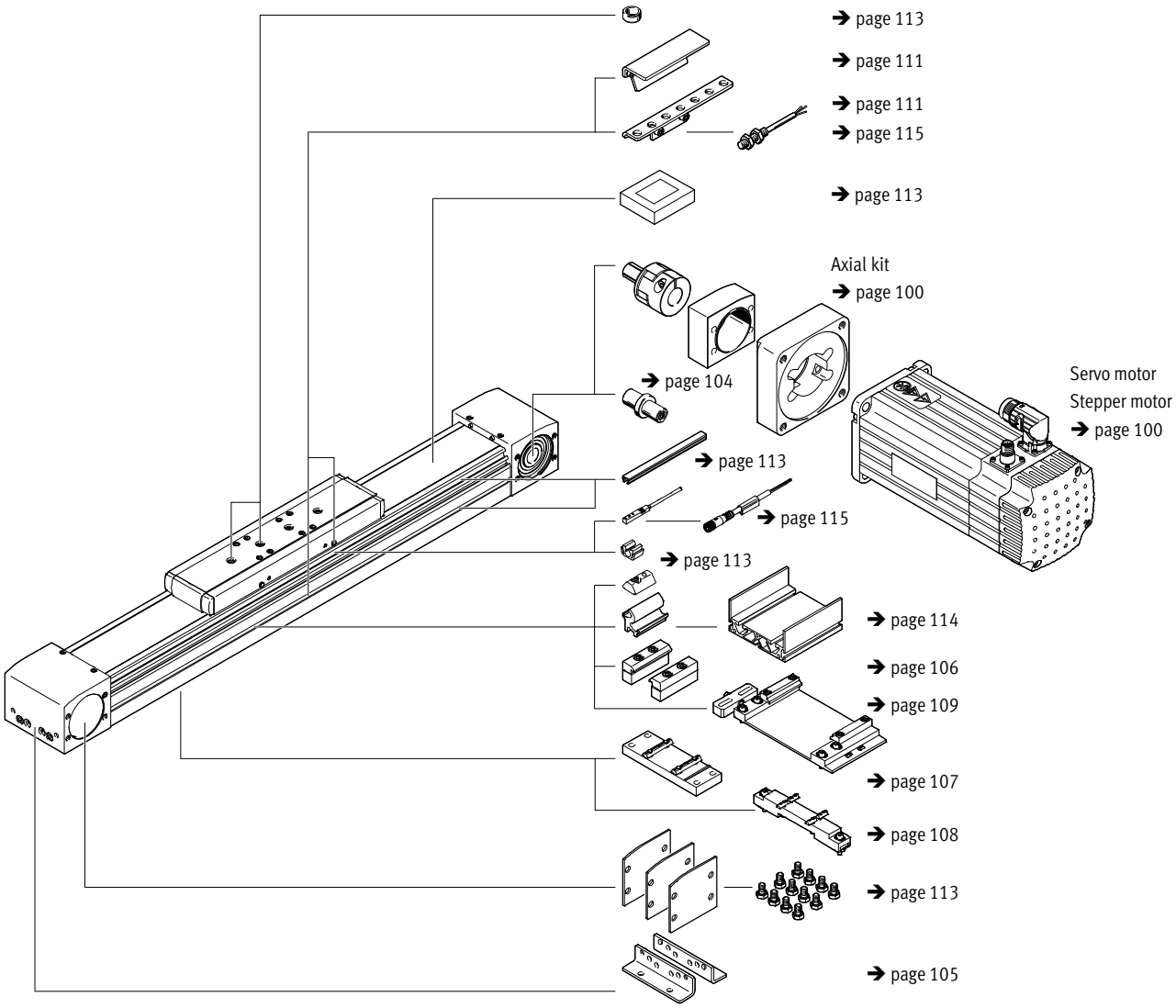

Toothed belt axes ELGA-TB-KF, with recirculating ball bearing guide

Ordering data – Modular products

FESTO

Ordering table									
Size		70	80	120	150	Condi-tions	Code		Entry code
M	Module no.	**8024914**	**8024915**	**8024916**	**8024917**				
	Design	Linear axis					**ELGA**		ELGA
	Function	Toothed belt					☆ **-TB**		-TB
	Guide	Recirculating ball bearing guide					☆ **-KF**		-KF
	Size [mm]	70	80	120	150		☆ **-...**		
	Stroke length [mm]	1 ... 5000	1 ... 8500	1 ... 8500	1 ... 7000		☆ **-...**		
	Stroke reserve [mm]	0 ... 999 (0 = no stroke reserve)				1	☆ **-...H**		
O	Additional slide	None					☆		
		1 slide on left					☆ **-ZL**		
		1 slide on right					☆ **-ZR**		
	Displacement encoder, incremental	None					☆		
		Resolution 2.5 µm					**-M1**		
		Resolution 10 µm					**-M2**		
	Displacement encoder attachment position	None					☆		
		Rear				2	**B**		
		Front				2	**F**		
	Operating instructions	With operating instructions					☆		
		Without operating instructions					☆ **-DN**		

1 ... **H** The sum of the nominal stroke and 2x stroke reserve must be at least 50 mm and must not exceed the maximum stroke length

2 **B, F** Only with displacement encoder M1, M2

M Mandatory data
O Options

Transfer order code

		ELGA	–	TB	–	KF	–		–		–		–		–		–		

Festo core product range	★ Ready for dispatch from the Festo factory in 24 hours ☆ Ready for dispatch in 5 days maximum from stock

Toothed belt axes ELGA-TB-KF-F1, with recirculating ball bearing guide

Peripherals overview – For the food zone

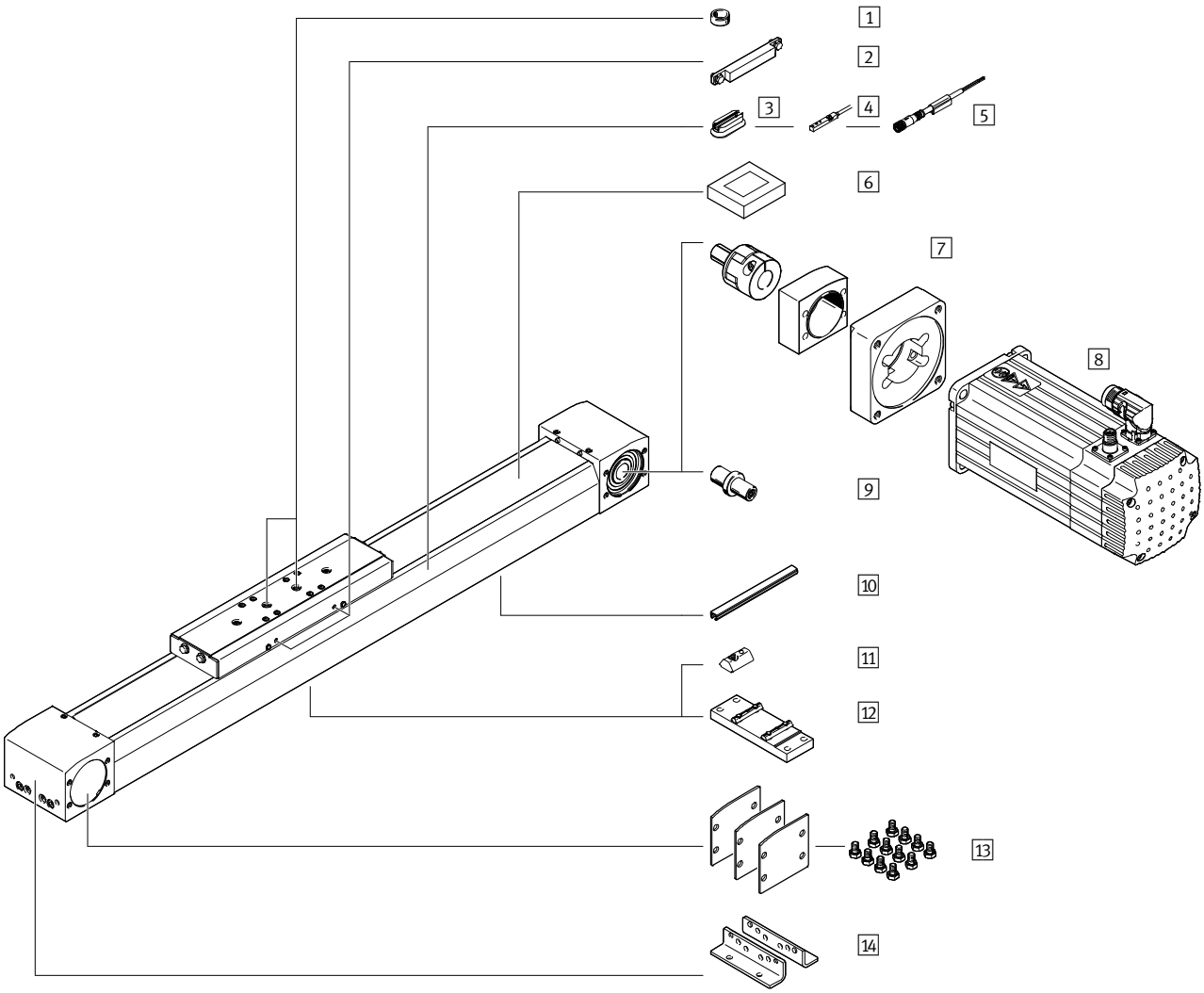

Accessories			
	Type/order code	Description	➔ Page/Internet
1	Centring pin/sleeve ZBS, ZBH	• For centring loads and attachments on the slide • 2 centring pins/sleeves included in the scope of delivery of the axis	113
2	Switch lug EAPM	For sensing the slide position	112
3	Mounting kit CRSMB	For mounting the inductive proximity sensors (round design) on the axis	112
4	Proximity sensor, T-slot SME-8M	For sensing the slide position	115
5	Connecting cable NEBU	For proximity sensor	115
6	Clamping component EADT	Tool for retensioning the cover strip	113
7	Axial kit EAMM	For axial motor mounting (comprises: coupling, coupling housing and motor flange)	100
8	Motor EMME, EMMS	Motors specially matched to the axis, with or without gear unit, with or without brake	100
9	Drive shaft EAMB	• Can, if required, be used as an alternative interface • No drive shaft is required for the axis/motor combinations ➔ page 100	104
10	Slot cover ABP	For protection against contamination	113
11	Slot nut NST	For mounting attachments	113
12	Central support EAHF-L5	For mounting the axis from underneath on the profile	107
13	Cover kit EASC-L5	For covering the sides of the drive cover	113
14	Foot mounting HPE	• For mounting the axis on the end cap • With higher forces and torques, the axis should be mounted using the profile	105

Toothed belt axes ELGA-TB-KF-F1, with recirculating ball bearing guide

Type codes – For the food zone

ELGA	–	TB	–	KF	–	70	–	800	–	20H	–	

Type	
ELGA	Toothed belt axis

Drive function	
TB	Toothed belt

Guide	
KF	Recirculating ball bearing guide

Size

Stroke [mm]

Stroke reserve

Additional slide	
–	None
ZL	1 slide on left
ZR	1 slide on right

Toothed belt axes ELGA-TB-KF-F1, with recirculating ball bearing guide

Type codes – For the food zone

➔	–	F1	–	PU1	–	

Additional features	
F1	Suitable for use in the food industry as per extended information on materials

Toothed belt material	
PU1	Uncoated PU

Operating instructions	
–	With operating instructions
DN	Without operating instructions

Toothed belt axes ELGA-TB-KF-F1, with recirculating ball bearing guide

Technical data – For the food zone

Function

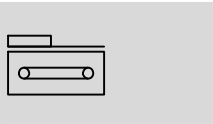

Size
70 … 120

Stroke length
50 … 8500 mm

www.festo.com

General technical data				
Size		70	80	120
Design		Electromechanical axis with toothed belt		
Guide		Recirculating ball bearing guide		
Mounting position		Any		
Working stroke	[mm]	50 … 5000	50 … 8500	50 … 8500
Max. feed force F_x	[N]	260	600	1000
Max. no-load torque[1)]	[Nm]	0.8	1.5	4.5
Max. no-load resistance to shifting[1)]	[N]	55.8	75.4	122
Max. driving torque	[Nm]	3.72	11.9	26.2
Max. speed	[m/s]	5		
Max. acceleration	[m/s²]	50		
Repetition accuracy	[mm]	±0.08		

1) At 0.2 m/s

Operating and environmental conditions		
Ambient temperature[1)]	[°C]	–10 … +60
Degree of protection		IP40
Duty cycle	[%]	100
Food-safe[2)]		➔ Further information on materials

1) Note operating range of proximity sensors.
2) Additional information www.festo.com/sp ➔ Certificates.

Weight [kg]			
Size	70	80	120
Basic weight with 0 mm stroke[1)]	3.01	4.70	15.68
Additional weight per 1000 mm stroke	4.00	5.13	10.64
Moving mass			
ELGA-…	0.9	1.9	4.19
ELGA-…ZL/ZR	0.74	1.53	3.24

1) Incl. slide

Toothed belt axes ELGA-TB-KF-F1, with recirculating ball bearing guide

Technical data – For the food zone

Toothed belt				
Size		70	80	120
Ptich	[mm]	3	5	5
Expansion[1)]	[%]	0.096	0.09	0.094
Effective diameter	[mm]	28.65	39.79	52.52
Feed constant	[mm/rev]	90	125	165

1) At max. feed force

Mass moment of inertia				
Size		70	80	120
J_O	[kg mm^2]	245	976	4065
J_H per metre stroke	[kg mm^2/m]	24.4	76.8	176.5
J_L per kg payload	[kg mm^2/kg]	205	396	690
J_W for additional slide	[kg mm^2]	186	761	2891

The mass moment of inertia J_A of the entire axis is calculated as follows:

$J_A = J_O + K \times J_W + J_H \times \text{working stroke [m]} + J_L \times m_{payload}$ [kg]

K = Number of additional slides

Materials

Sectional view

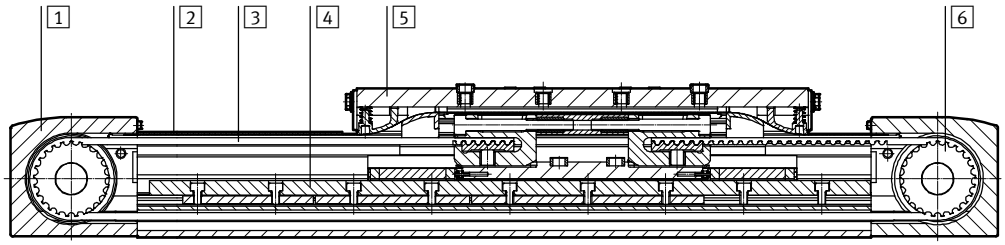

Axis				
Size		70	80	120
1	Drive cover	Anodised wrought aluminium alloy		
2	Cover strip	Stainless steel		
3	Toothed belt	Polyurethane with steel cord		
4	Guide rail	Stainless steel		Tempered steel
5	Slide	Anodised wrought aluminium alloy		
6	Belt pulley	High-alloy stainless steel		
	Note on materials	RoHS-compliant		
		Contains paint-wetting impairment substances		

Characteristic load values

The indicated forces and torques refer to the centre of the guide. The point of application of force is the point where the centre of the guide and the longitudinal centre of the slide intersect. These values must not be exceeded during dynamic operation. Special attention must be paid to the cushioning phase.

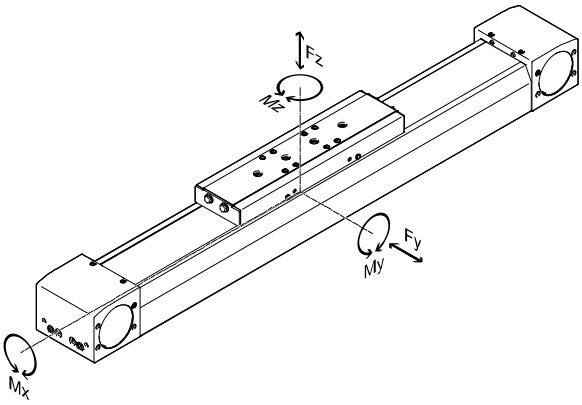

Distance from the slide surface to the centre of the guide

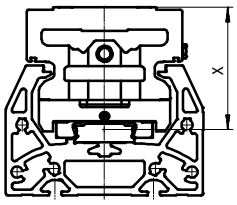

Distance from the slide surface to the centre of the guide				
Size		70	80	120
Dimension x	[mm]	37	50	70

Max. permissible forces and torques for a service life of 5000 km				
Size		70	80	120
$Fy_{max.}$	[N]	1500	2500	5500
Fz_{max}	[N]	1850	3050	6890
$Mx_{max.}$	[Nm]	16	36	104
$My_{max.}$	[Nm]	132	228	680
$Mz_{max.}$	[Nm]	132	228	680

Note

For a guide system to have a service life of 5000 km, the load comparison factor must have a value of fv < 1, based on the maximum permissible forces and torques for a service life of 5000 km.

If the axis is subjected to two or more of the indicated forces and torques simultaneously, the following equation must be satisfied in addition to the indicated maximum loads:

Calculating the load comparison factor:

$$f_v = \frac{|F_{y,dyn}|}{F_{y,max}} + \frac{|F_{z,dyn}|}{F_{z,max}} + \frac{|M_{x,dyn}|}{M_{x,max}} + \frac{|M_{y,dyn}|}{M_{y,max}} + \frac{|M_{z,dyn}|}{M_{z,max}}$$

Calculating the service life

The service life of the guide depends on the load. To provide a rough indication of the service life of the guide, the graph below plots the load comparison factor f_v against the service life.

These values are only theoretical. You must consult your local contact person at Festo for load comparison factors f_v greater than 1.5.

Load comparison factor f_v as a function of service life

Example:
A user wants to move an X kg load. Using the formula ➔ page 36 gives a value of 1.5 for the load comparison factor f_v. According to the graph, the guide would have a service life of approx. 1500 km. Reducing the acceleration reduces the Mz and My values. A load comparison factor f_v of 1 now gives a service life of 5000 km.

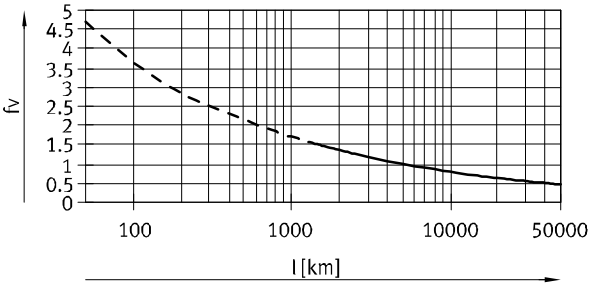

Note

PositioningDrives engineering software www.festo.com

The software can be used to calculate a guide workload for a service life of 5000 km.

$f_v > 1.5$ are only theoretical comparison values for the recirculating ball bearing guide.

Comparison of the characteristic load values for 5000 km with dynamic forces and torques of recirculating ball bearing guides

The characteristic load values of roller guides are standardised to ISO and JIS using dynamic and static forces and torques. These forces and torques are based on an expected guiding system service life of 100 km to ISO or 50 km to JIS.
As the characteristic load values are dependent on the service life, the maximum permissible forces and torques for a 5000 km service life cannot be compared with the dynamic forces and torques of roller guides to ISO/JIS.

To make it easier to compare the guide capacity of linear axes ELGA with roller guides, the table below lists the theoretically permissible forces and torques for a calculated service life of 100 km. This corresponds to the dynamic forces and torques to ISO.
These 100 km values have been calculated mathematically and are only to be used for comparing with dynamic forces and torques to ISO. The drives must not be loaded with these characteristic values as this could damage the axes.

Max. permissible forces and torques for a theoretical service life of 100 km (from a guide perspective only)

Size		70	80	120
$Fy_{max.}$	[N]	5520	9200	20240
Fz_{max}	[N]	6808	11224	25355
$Mx_{max.}$	[Nm]	59	132	383
$My_{max.}$	[Nm]	486	839	2502
$Mz_{max.}$	[Nm]	486	839	2502

Max. acceleration a as a function of payload m

Size 70

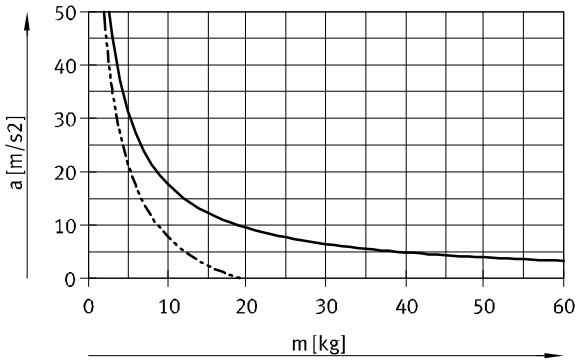

Size 80

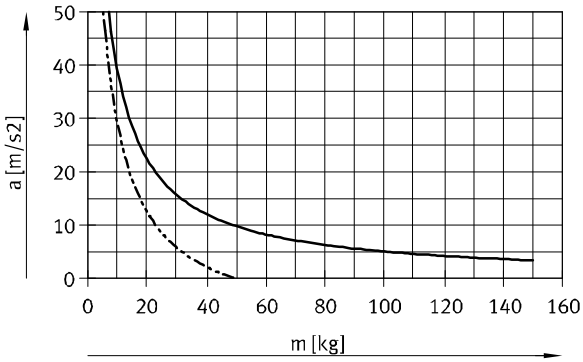

Size 120

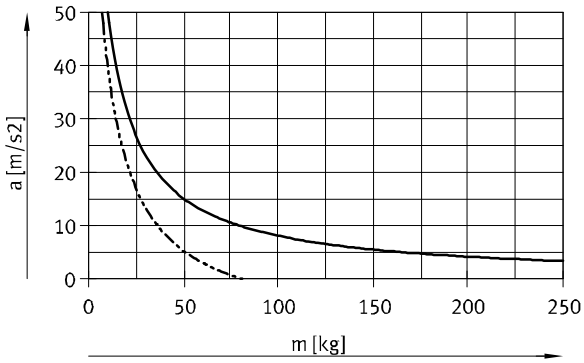

Horizontal
Vertical

Speed v as a function of rotational speed n

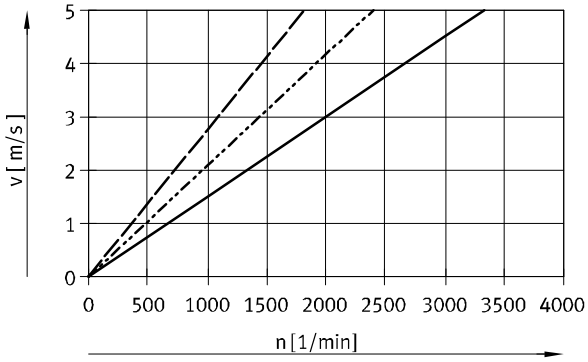

ELGA-TB-KF-70
ELGA-TB-KF-80
ELGA-TB-KF-120

Theoretical feed force F as a function of input torque M

Size 70

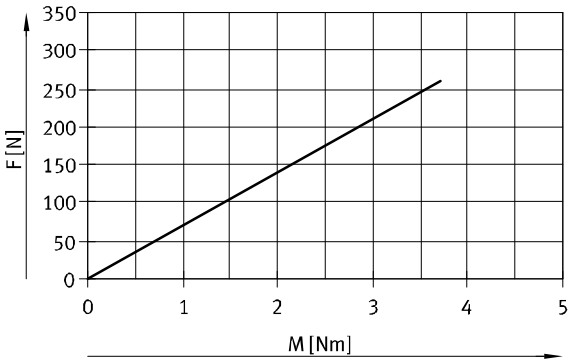

ELGA-TB-KF-70

Size 80/120

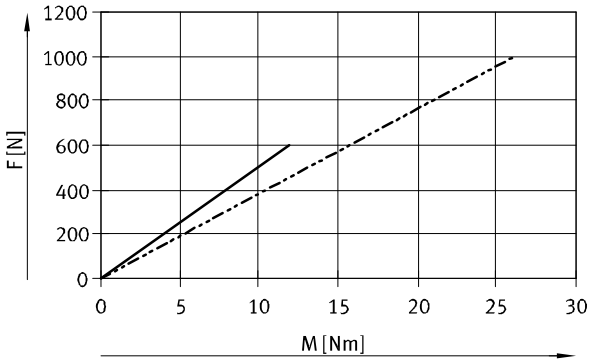

ELGA-TB-KF-80

ELGA-TB-KF-120

Stroke reserve

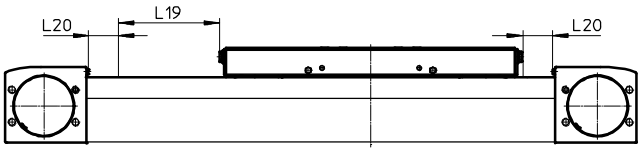

L19 = Nominal stroke

L20 = Stroke reserve

- The stroke reserve is a safety distance which is generally not used as work space
- The sum of the nominal stroke and 2x stroke reserve must not exceed the maximum working stroke
- The stroke reserve length can be freely selected
- The stroke reserve is defined via the "stroke reserve" characteristic in the modular product system.

Example:

Type ELGA-TB-KF-70-500-20H-...

Nominal stroke	= 500 mm
2x stroke reserve	= 40 mm
Working stroke	= 540 mm

(540 mm = 500 mm + 2x 20 mm)

Working stroke reduction

With axis ELGA with additional slide ZL/ZR

With a toothed belt axis with additional slide, the working stroke is reduced by the length of the additional slide and the distance between both slides

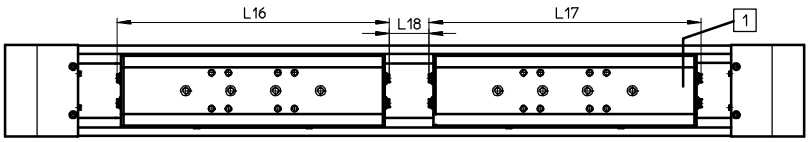

L16 = Slide length

L17 = Additional slide length

L18 = Distance between both slides

1 Additional slide

Example:

Type ELGA-TB-KF-70-500-...-ZR

Working stroke without additional slide	= 500 mm
L18	= 50 mm
L16, L17	= 221 mm

Working stroke with additional slide= 229 mm

(500 mm – 50 mm – 221 mm)

Dimensions – Additional slide				
Size		70	80	120
Length L17	[mm]	221	246	335
Min. distance between the slides L18	[mm]	≥ 50	≥ 50	≥ 50

Toothed belt axes ELGA-TB-KF-F1, with recirculating ball bearing guide

Technical data – For the food zone

Second moment of area

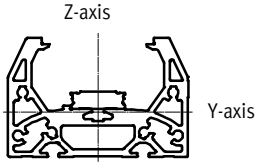

Size		70	80	120
Iy	[mm^4]	1.69x10^5	2.95x10^5	1.35x10^6
Iz	[mm^4]	4.84x10^5	9.78x10^5	4.50x10^6

Maximum permissible support span L (without profile mounting MUE/central support EAHF) as a function of force F

In order to limit deflection in the case of large strokes, the axis may need to be supported.
The following graphs can be used to determine the maximum permissible support span l as a function of force F acting on the axis. The deflection is f = 0.5 mm.

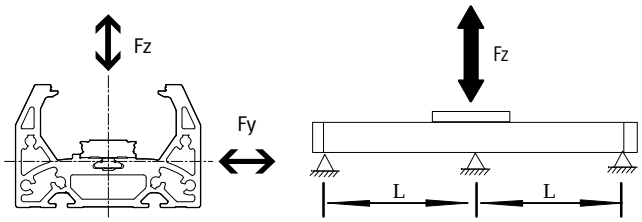

Force Fy

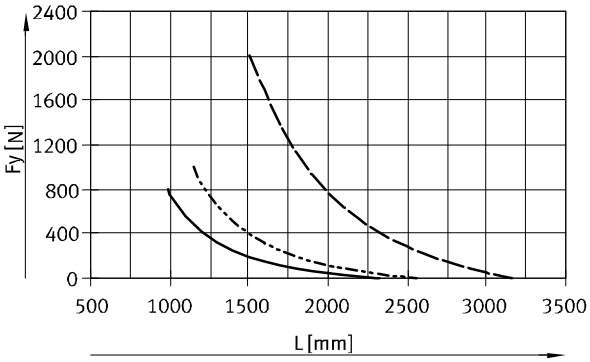

Force Fz

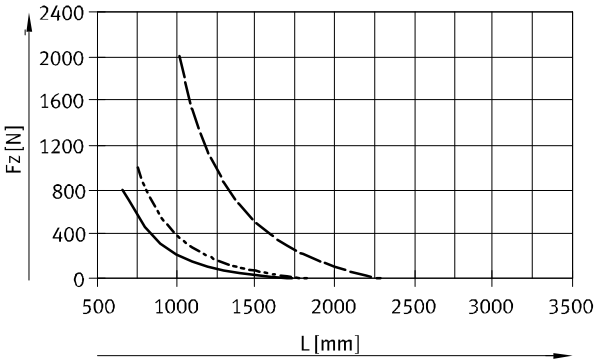

ELGA-TB-KF-70
ELGA-TB-KF-80
ELGA-TB-KF-120

Recommended deflection limits

Adherence to the following deflection limits is recommended so as not to impair the functional performance of the axes. Greater deformation can result in increased friction, greater wear and reduced service life.

Size	Dyn. deflection (moving load)	Stat. deflection (stationary load)
70 … 120	0.05% of the axis length, max. 0.5 mm	0.1% of the axis length

Central lubrication

The lubrication connections enable the guide and the ball screw of the spindle axis ELGA-BS-KF to be permanently lubricated in applications in humid or wet ambient conditions using semi- or fully automatic relubrication devices.

- The connection options are already available in the standard design of the axes
- There is a dedicated lubrication connection for the spindle nut and the two ball cassettes

Slide dimensions
➔ page 44

Structure of a central lubrication system

A central lubrication system requires various additional components. The illustration shows different options (using a hand pump, pneumatic container pump or electric container pump) required as a minimum for designing a central lubrication system. Festo does not sell these additional components; however, they can be obtained from the following companies:

– Lincoln
– Bielomatik
– SKF (Vogel)

Festo recommends these companies because they can supply all the necessary components.

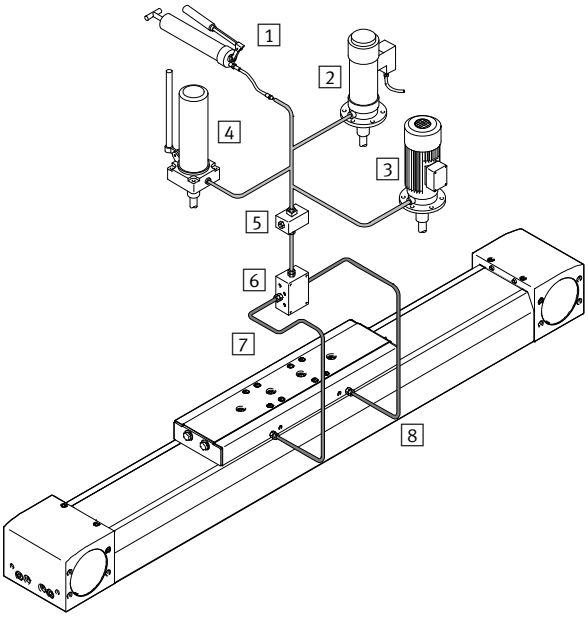

1 Hand pump
2 Pneumatic container pump
3 Electric container pump
4 Manually operated container pump
5 Nipple block
6 Distributor block
7 Tubing or piping
8 Fittings

Toothed belt axes ELGA-TB-KF-F1, with recirculating ball bearing guide

Technical data – For the food zone

Dimensions Download CAD data ➔ **www.festo.com**

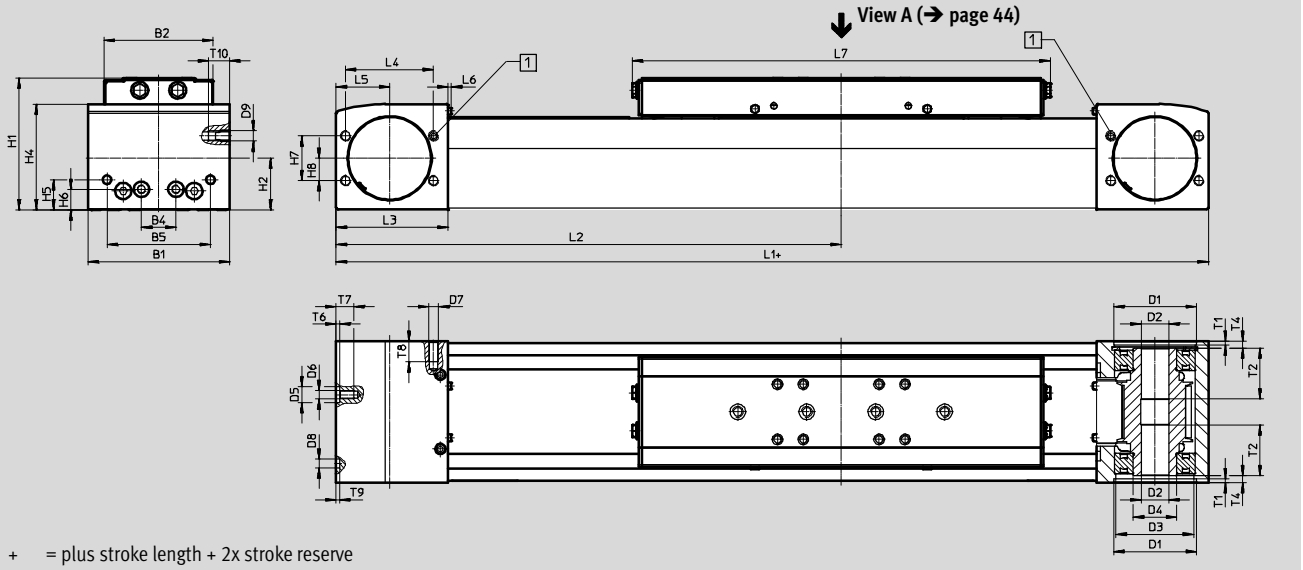

\+ = plus stroke length + 2x stroke reserve

1 Sealing air connections

Size	B1	B2	B4	B5	D1 ∅ H7	D2 ∅ H7	D3 ∅	D4 ∅	D5 ∅ H7	D6	D7	D8 ∅ H7
70	69	48.2	30	45	38	16	34	25	–	M5	M6	5
80	82	63.2	20	60	48	16	45	25	9	M5	M6	5
120	120	95	80	40	80	23	72	45	–	M8	M8	9

Size	D9	H1	H2	H4	H5	H6	H7	H8	L1	L2 Min.	L3	L4
70	M6	64	26.5	50.8	13	13	24	12	346	178	57.5	42
80	M6	76.5	30	61.5	17.5	12	26	13	386	193	65	51
120	M8	111.5	45	91	22	22	59	32	546	273	100	76

Size	L5	L6	L7	T1	T2	T4	T6	T7	T8	T9	T10
70	27.5	2.3	218	2.1	18	7.2	–	10	12	3.1	12
80	31	2.3	243	2.1	29.5	4	2.1	10.1	12	2	12
120	50	2.5	332	3.1	29.5	4	–	16	16	2.1	25

Note

The roller carriages of the standard design of the variant ELGA-TB-KF-F1 will be greased. This will be done in accordance with the guidelines Doc.23 from EHEDG.

As part of this process, the standard grease except for small residual quantities will be replaced with a grease with NSF H1 approval.

Dimensions Download CAD data ➔ **www.festo.com**

Profile

Size 70

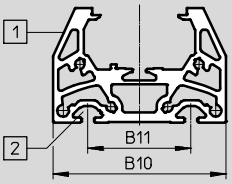

Size 80

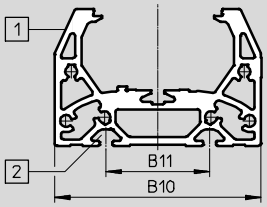

Size 120

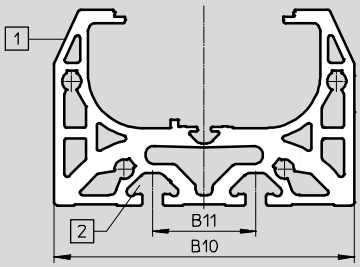

1 Sensor slot for proximity sensor

2 Mounting slot for slot nut:
for size 70, 80: slot nut NST-5-M5
for size 120: slot nut NST-8-M6

Note

Requirements for the flatness of the bearing surface and of attachments as well as for use in parallel structures

➔ www.festo.com/sp User documentation

Size	B10	B11
70	67	40
80	80	40
120	116	40

Dimensions Download CAD data ➔ **www.festo.com**

Slide

Size 70

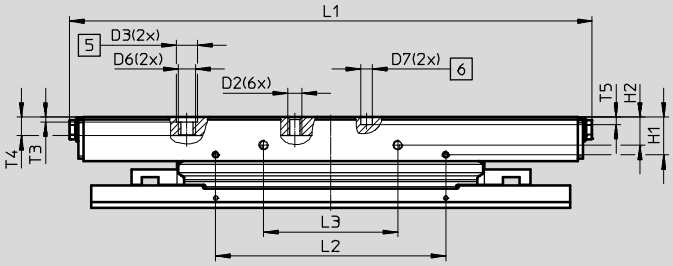

View A

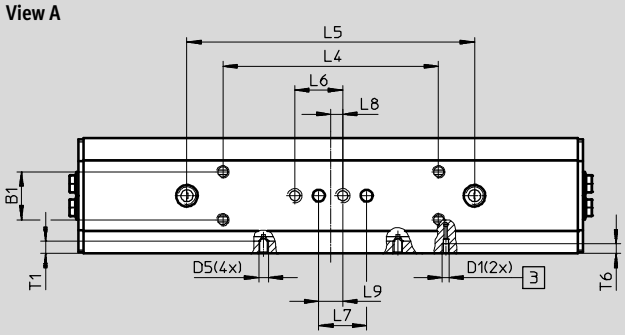

Size 80

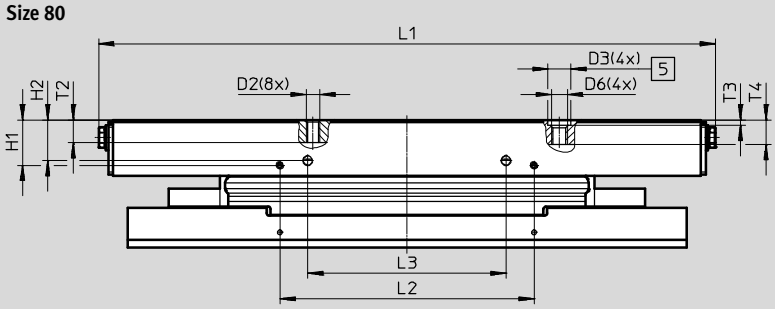

View A

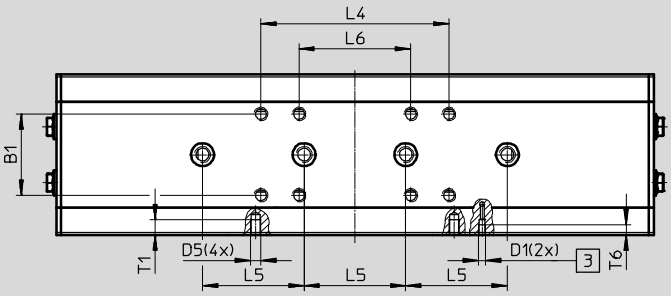

3 Lubrication connections
5 Hole for centring sleeve ZBH
6 Hole for centring pin ZBS

Size	B1 ±0.1	D1	D2	D3 ∅ H7	D5	D6	D7 ∅ H7	H1 ±0.1	H2 ±0.1	L1	L2 ±0.1	L3 ±0.1
70	20	M6	M5	9	M4	M6	5	14.2	11.7	218	96	56
80	32	M6	M5	9	M4	M6	–	16.6	16	243	101.4	78

Size	L4 ±0.1	L5 ±0.03	L6 ±0.1	L7 ±0.03	L8	L9 ±0.1	T1	T2	T3 +0.1	T4	T5 ±0.1	T6 Min.	T6 Max.
70	90	120	20	20	5	10	5.1	–	2.1	7.5	3.1	4.2	$4.6_{-0.1}$
80	74	40	44	–	–	–	6	9	2.1	$9.7_{-0.2}$	–	5.6	$5.9_{-0.1}$

Dimensions Download CAD data ➔ **www.festo.com**

Slide

Size 120

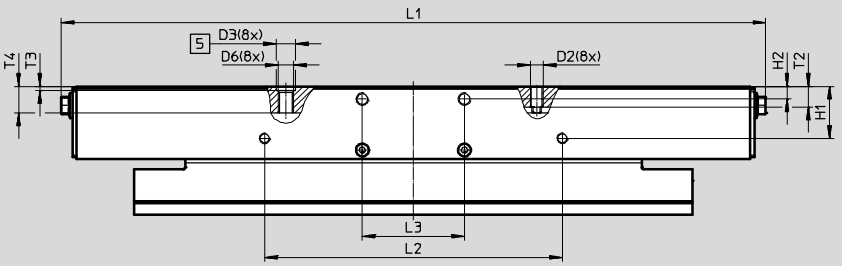

View A

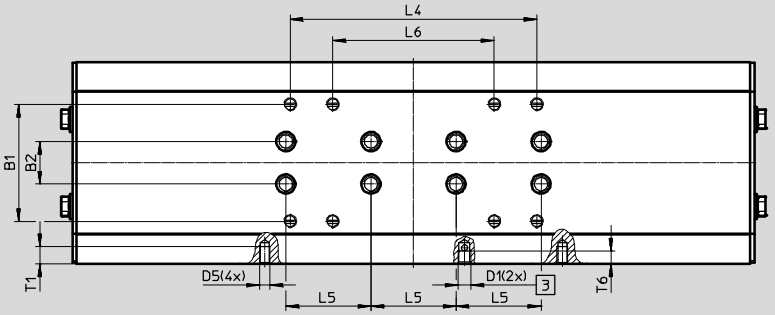

3 Lubrication connections

5 Hole for centring sleeve ZBH

Size	B1 ±0.1	B2 ±0.03	D1	D2	D3 ∅ H7	D5	D6	H1 ±0.1	H2	L1
120	55	20	M6	M5	9	M5	M6	24.5	6	332

Size	L2 ±0.1	L3 ±0.1	L4 ±0.1	L5 ±0.03	L6 ±0.1	T1	T2	T3 +0.1	T4 −0.3	T6
120	140	48	116	40	76	8	9.7	2.1	12.6	6

Toothed belt axes ELGA-TB-KF-F1, with recirculating ball bearing guide

Ordering data – Modular product system – For the food zone

Orientation guide

O top
U underneath
R right
L left
V front
H rear

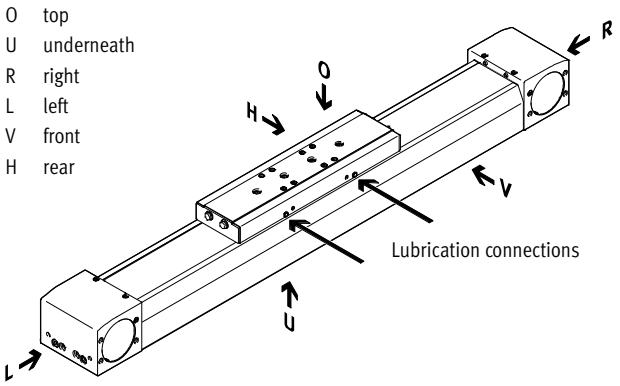

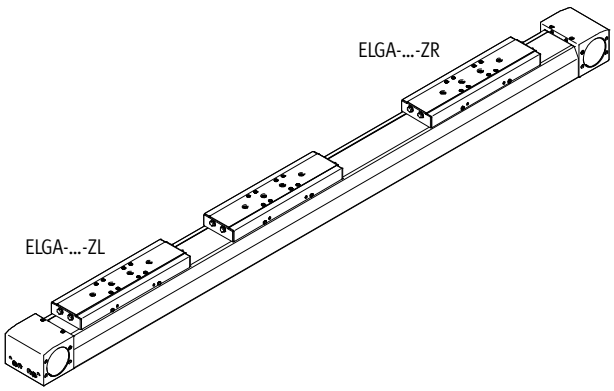

Accessories

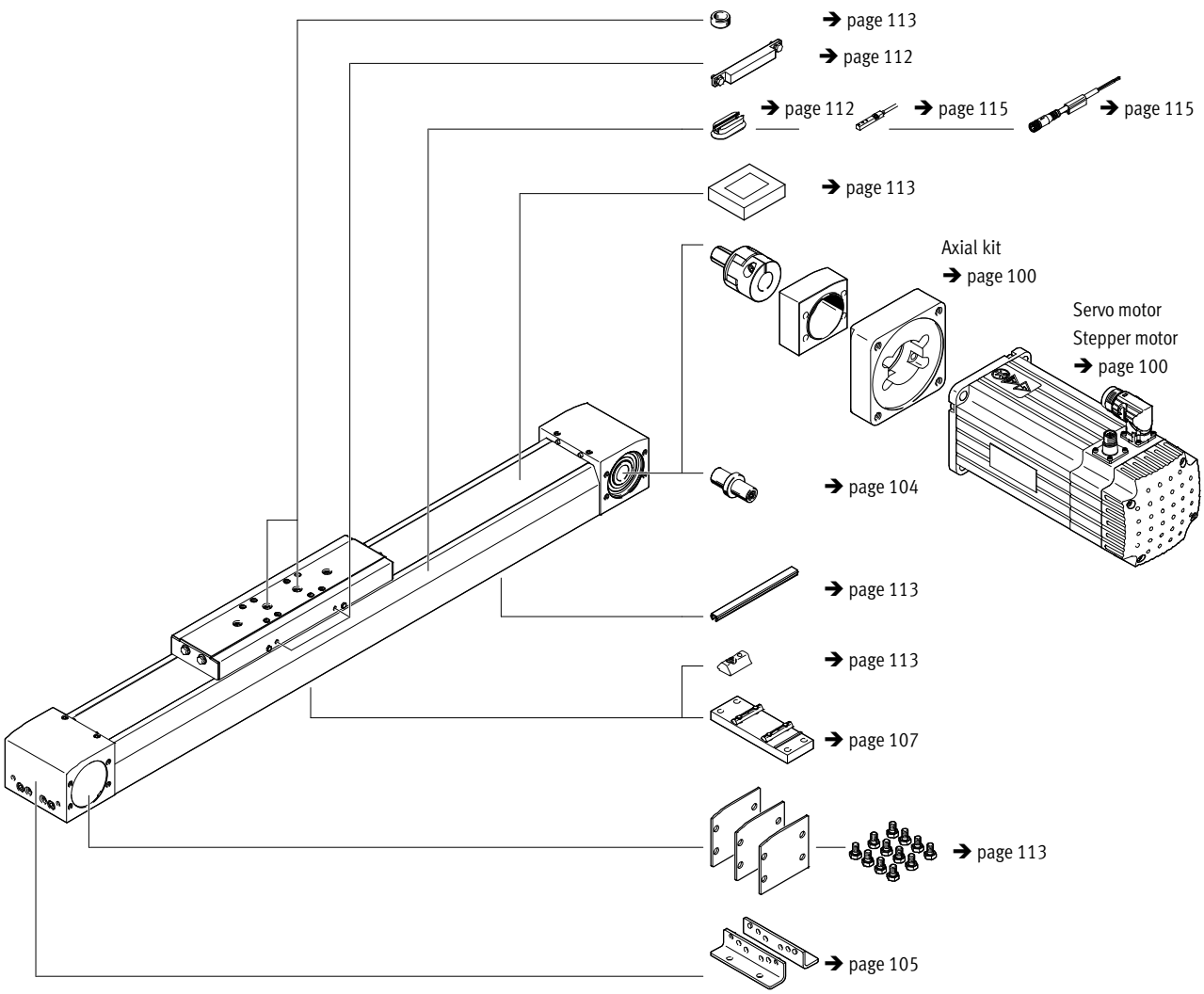

Toothed belt axes ELGA-TB-KF-F1, with recirculating ball bearing guide

Ordering data – Modular products – For the food zone

Ordering table								
Size		70	80	120	Conditions	Code		Entry code
M	Module no.	**8024914**	**8024915**	**8024916**				
	Design	Linear axis				**ELGA**		ELGA
	Function	Toothed belt				**-TB**		-TB
	Guide	Recirculating ball bearing guide				**-KF**		-KF
	Size [mm]	70	80	120		**-...**		
	Stroke length [mm]	1 ... 5000	1 ... 8500	1 ... 8500		**-...**		
	Stroke reserve [mm]	0 ... 999 (0 = no stroke reserve)			1	**-...H**		
O	Additional slide	None						
		1 slide on left				**-ZL**		
		1 slide on right				**-ZR**		
	Additional features	Suitable for use in the food industry as per extended information on materials				**-F1**		-F1
	Toothed belt material	Uncoated PU				**-PU1**		-PU1
	Operating instructions	With operating instructions						
		Without operating instructions				**-DN**		

1 ... **H** The sum of the nominal stroke and 2x stroke reserve must be at least 50 mm and must not exceed the maximum stroke length

M Mandatory data
O Options

Transfer order code

	ELGA	–	TB	–	KF	–		–		–		–		–	F1	–	PU1	–		

Toothed belt axes ELGA-TB-RF, with roller bearing guide

Peripherals overview

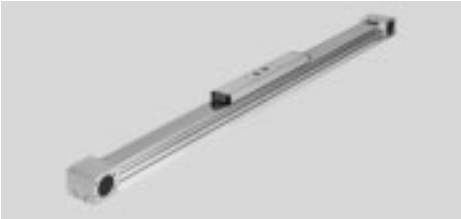

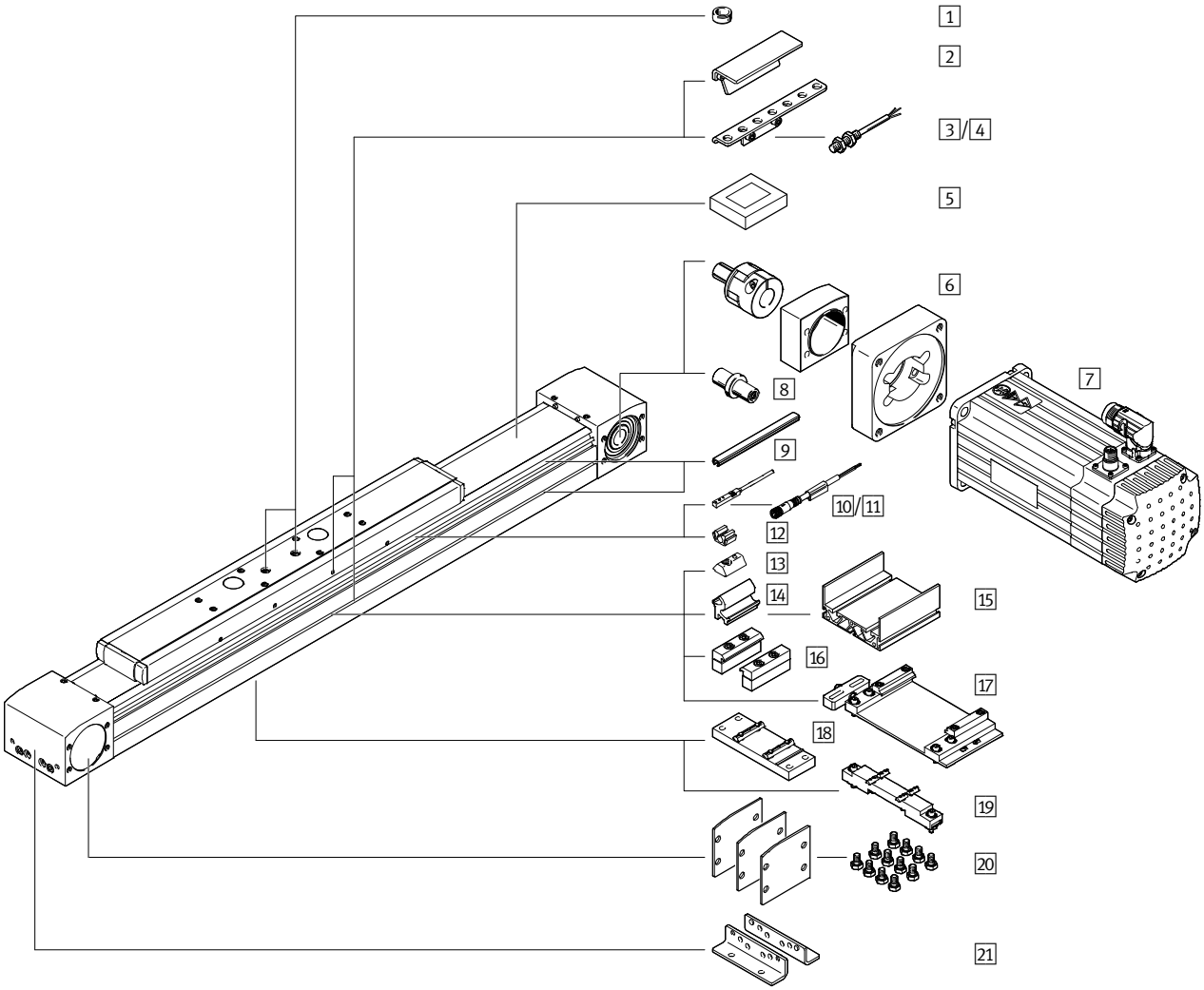

Slide variants		
ELGA-... Standard slide	ELGA-...-S Short slide	ELGA-...-L Long slide

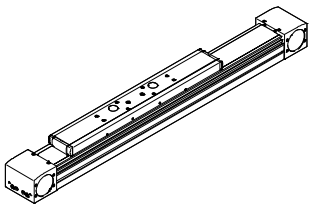

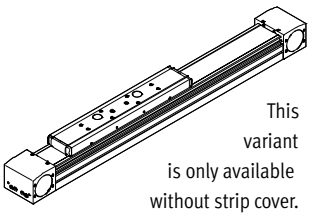

This variant is only available without strip cover.

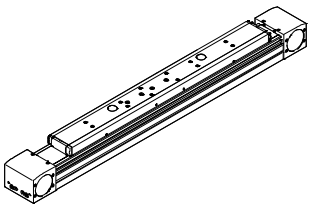

Accessories			
	Type/order code	Description	➔ Page/Internet
1	Centring pin/sleeve ZBS, ZBH	• For centring loads and attachments on the slide • 2 centring pins/sleeves included in the scope of delivery of the axis	113
2	Switch lug SA, SB, SC, SD, SE, SF	For sensing the slide position	110
3	Sensor bracket SC, SD, SE, SF	For mounting the inductive proximity sensors (round design) on the axis	111
4	Proximity sensor, M8 SC, SD, SE, SF	• Inductive proximity sensor, round design • The order code SC, SD, SE, SF includes 1 switch lug and max. 2 sensor brackets in the scope of delivery	115
5	Clamping component EADT	Tool for retensioning the cover strip	113
6	Axial kit EAMM	For axial motor mounting (comprises: coupling, coupling housing and motor flange)	100
7	Motor EMME, EMMS	Motors specially matched to the axis, with or without gear unit, with or without brake	100
8	Drive shaft EA	• Can, if required, be used as an alternative interface • No drive shaft is required for the axis/motor combinations ➔ page 100	104
9	Slot cover NS, NC	• For protection against the ingress of dirt	113
10	Proximity sensor, T-slot SA, SB	• Inductive proximity sensor, for T-slot • The order code SA, SB includes 1 switch lug in the scope of delivery	114
11	Connecting cable CA	For proximity sensor (order code SE and SF)	115
12	Clip CM	For mounting the proximity sensor cable in the slot	113
13	Slot nut NM	For mounting attachments	113
14	Adapter kit DHAM	For mounting the support profile on the axis	114
15	Support profile HMIA	For mounting and guiding an energy chain	114
16	Profile mounting MA	For mounting the axis on the side of the profile	106
17	Adjusting kit EADC-E16	Used to mount the axis on a vertical surface. Following mounting, the axis can be aligned horizontally	109
18	Central support EAHF-L5	For mounting the axis from underneath on the profile	107
19	Adjusting kit EADC-E15	It is height-adjustable. Can be used to compensate any unevenness in the bearing surface	108
20	Cover kit EASC-L5	For covering the sides of the drive cover	113
21	Foot mounting MF	• For mounting the axis on the end cap • With higher forces and torques, the axis should be mounted using the profile	105

Toothed belt axes ELGA-TB-RF, with roller bearing guide

Type codes

ELGA	–	TB	–	RF	–	70	–	800	–	20H	–		–	

Type	
ELGA	Toothed belt axis

Drive function	
TB	Toothed belt

Guidance	
RF	Roller bearing guide

Size

Stroke [mm]

Stroke reserve

Slide design	
–	Standard slide
S	Short slide
L	Long slide

Protection against particles	
–	Standard
P0	Without strip cover

Toothed belt axes ELGA-TB-RF, with roller bearing guide

Type codes

➔	+	MF2SA	–	

Accessories enclosed separately	
MF	Foot mounting
...MA	Profile mounting
...SA	Proximity sensor (SIES), inductive, slot type 8, PNP, N/O contact, 7.5 m cable
...SB	Proximity sensor (SIES), inductive, slot type 8, PNP, N/C contact, 7.5 m cable
...SC	Proximity sensor (SIEN), inductive, M8, PNP, N/O contact, 2.5 m cable
...SD	Proximity sensor (SIEN), inductive, M8, PNP, N/C contact, 2.5 m cable
...SE	Proximity sensor (SIEN), inductive, M8, PNP, N/O contact, plug connector M8
...SF	Proximity sensor (SIEN), inductive, M8, PNP, N/C contact, plug connector M8
...CA	Connecting cable
...NS	Sensor slot cover
...NC	Mounting slot cover
...NM	Slot nut for mounting slot
...CM	Cable clip
...EA	Drive shaft

Operating instructions	
–	With operating instructions
DN	Without operating instructions

Toothed belt axes ELGA-TB-RF, with roller bearing guide

Technical data

Function

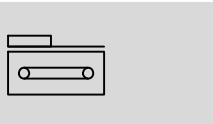

Size
70 … 120

Stroke length
50 … 7400 mm

www.festo.com

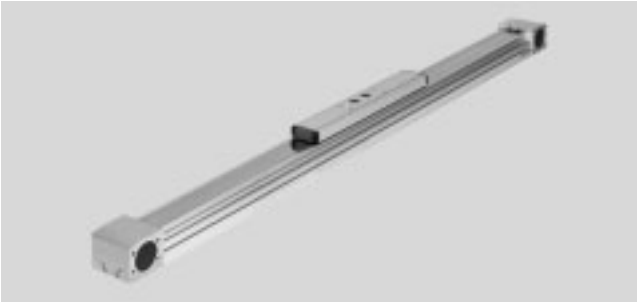

General technical data				
Size		70	80	120
Design		Electromechanical axis with toothed belt		
Guidance		Roller bearing guide		
Mounting position		Any		
Working stroke				
ELGA-…	[mm]	50 … 7000	50 … 7000	50 … 7400
ELGA-…-S	[mm]	50 … 7000	50 … 7000	50 … 7400
ELGA-…-L	[mm]	50 … 6900	50 … 6900	50 … 7200
Max. feed force F_x	[N]	350	800	1300
Max. no-load torque[1]	[Nm]	0.66	1.35	3
Max. no-load resistance to shifting[1]	[N]	46	68	114
Max. driving torque	[Nm]	5	15.9	34.1
Max. speed	[m/s]	10		
Max. acceleration	[m/s²]	50		
Repetition accuracy	[mm]	±0.08		

1) At 0.2 m/s

Operating and environmental conditions		
Ambient temperature[1]	[°C]	–10 … +60
Degree of protection		
ELGA-…		IP40
ELGA-…-P0		IP00
Duty cycle	[%]	100

1) Note operating range of proximity sensors

Weight [kg]			
Size	70	80	120
Basic weight with 0 mm stroke[1]			
ELGA-…	2.78	6.25	17.39
ELGA-…-S	2.39	5.62	15.82
ELGA-…-L	3.33	7.49	21.44
Additional weight per 1000 mm stroke			
ELGA-…	3.29	5.17	10.81
ELGA-…-P0	3.18	5.06	10.66
Moving load			
ELGA-…	0.80	2.01	5.08
ELGA-…-S	0.70	1.85	4.65
ELGA-…-L	1.03	2.53	6.63

1) Incl. slide

Toothed belt axes ELGA-TB-RF, with roller bearing guide

Technical data

Toothed belt				
Size		70	80	120
Pitch	[mm]	3	5	5
Expansion[1)]	[%]	0.21	0.17	0.21
Effective diameter	[mm]	28.65	39.79	52.52
Feed constant	[mm/rev]	90	125	165

1) At max. feed force

Mass moment of inertia				
Size		70	80	120
J_O				
ELGA-...	[kg mm²]	232	1044	4935
ELGA-...-S	[kg mm²]	207	968	4592
ELGA-...-L	[kg mm²]	278	1247	6006
J_H per metre stroke	[kg mm²/m]	19	97	221
J_L per kg payload	[kg mm²/kg]	205	396	690

The mass moment of inertia J_A of the entire axis is calculated as follows:

$$J_A = J_O + J_H \times \text{working stroke [m]} + J_L \times m_{payload} \text{ [kg]}$$

Materials

Sectional view

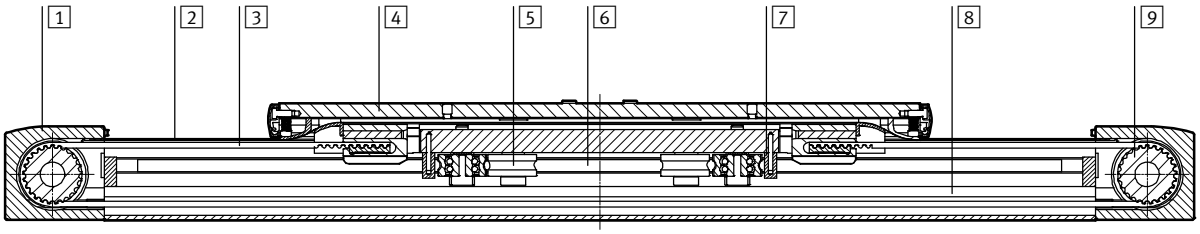

Axis		
1	Drive cover	Anodised wrought aluminium alloy
2	Cover strip	Stainless steel
3	Toothed belt	Polychloroprene with glass cord and nylon coating
4	Slides	Anodised wrought aluminium alloy
5	Guide roller	Hardened rolled steel
6	Guide rod	Hard-chromium plated tempered steel, hardened
7	Wiper ring	Oil-impregnated felt
8	Profile	Anodised wrought aluminium alloy
9	Toothed belt pulley	High-alloy stainless steel
	Note on materials	RoHS-compliant
		Contains paint-wetting impairment substances

Characteristic load values

The indicated forces and torques refer to the slide surface. The point of application of force is the point where the centre of the guide and the longitudinal centre of the slide intersect. These values must not be exceeded during dynamic operation. Special attention must be paid to the cushioning phase.

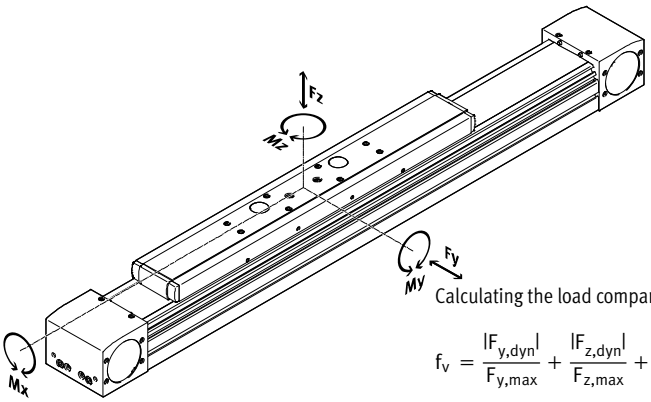

If the axis is subjected to two or more of the indicated forces and torques simultaneously, the following equation must be satisfied in addition to the indicated maximum loads:

Calculating the load comparison factor:

$$f_v = \frac{|F_{y,dyn}|}{F_{y,max}} + \frac{|F_{z,dyn}|}{F_{z,max}} + \frac{|M_{x,dyn}|}{M_{x,max}} + \frac{|M_{y,dyn}|}{M_{y,max}} + \frac{|M_{z,dyn}|}{M_{z,max}} \leqq 1$$

Max. permissible forces and torques for a service life of 10000 km				
Size		70	80	120
$Fy_{max.}$	[N]	500	800	2000
Fz_{max}	[N]	500	800	2000
$Mx_{max.}$	[Nm]	11	30	100
$My_{max.}$				
ELGA-...	[Nm]	20	90	320
ELGA-...-S	[Nm]	20	90	320
ELGA-...-L	[Nm]	40	180	640
$Mz_{max.}$				
ELGA-...	[Nm]	20	90	320
ELGA-...-S	[Nm]	20	90	320
ELGA-...-L	[Nm]	40	180	640

Calculating the service life

The service life of the guide depends on the load. To provide a rough indication of the service life of the guide, the graph below plots the load comparison factor f_v against the service life.

These values are only theoretical. You must consult your local contact person at Festo for load comparison factors f_v greater than 1.5.

Load comparison factor f_v as a function of service life

Example:
A user wants to move an X kg load. Using the formula ➔ page 54 gives a value of 1.5 for the load comparison factor f_v. According to the graph, the guide would have a service life of approx. 3000 km. Reducing the acceleration reduces the Mz and My values. A load comparison factor f_v of 1 now gives a service life of 10000 km.

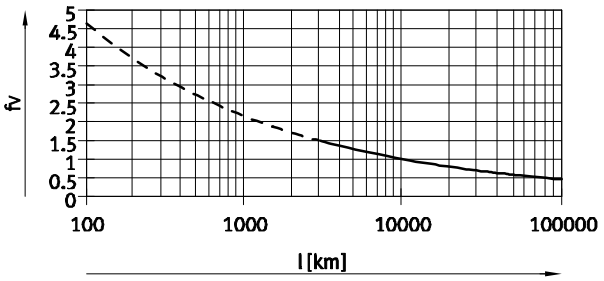

Note

PositioningDrives engineering software www.festo.com

The software can be used to calculate a guide workload for a service life of 10000 km.

$f_v > 1.5$ are only theoretical comparison values for the roller bearing guide.

Max. acceleration a as a function of payload m

Size 70

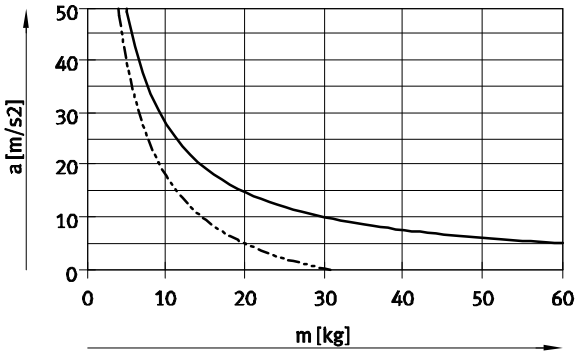

Size 80

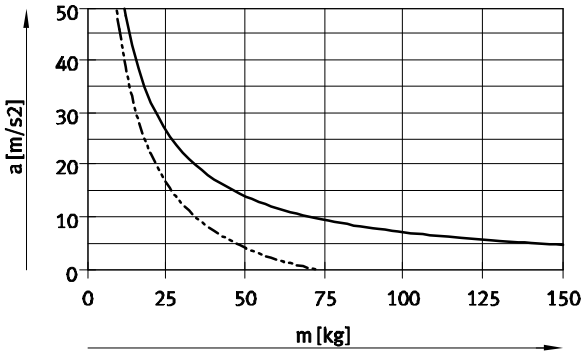

Size 120

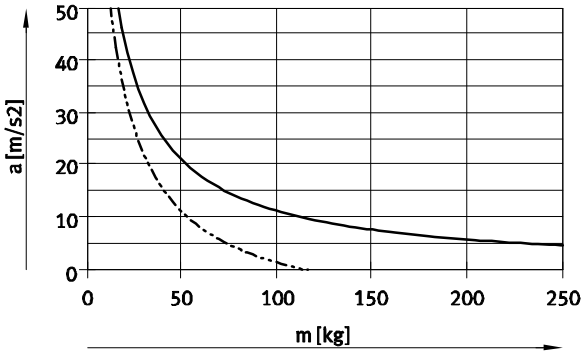

Horizontal
Vertical

Speed v as a function of rotational speed n

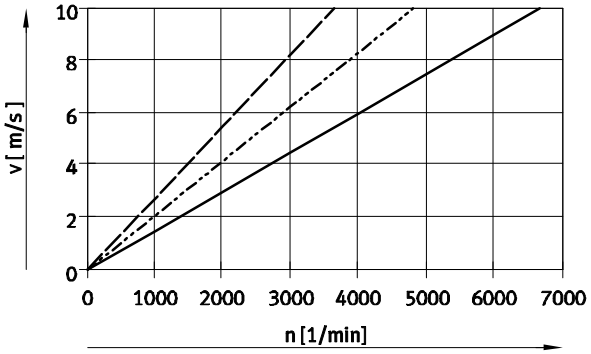

ELGA-TB-RF-70
ELGA-TB-RF-80
ELGA-TB-RF-120

Theoretical feed force F as a function of input torque M

Size 70

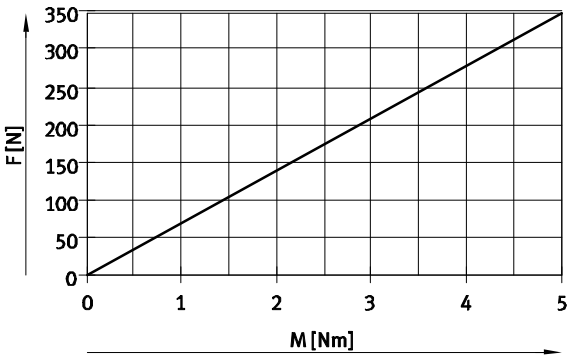

ELGA-TB-RF-70

Size 80/120

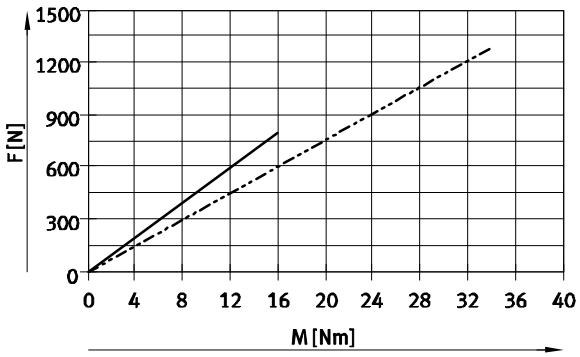

ELGA-TB-RF-80
ELGA-TB-RF-120

Stroke reserve

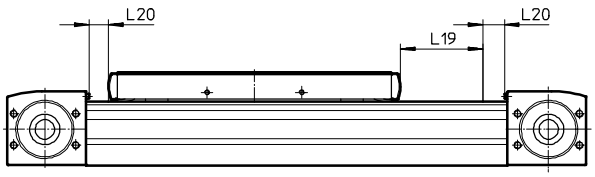

L19 = Nominal stroke
L20 = Stroke reserve

- The stroke reserve is a safety distance which is generally not used as work space
- The sum of the nominal stroke and 2x stroke reserve must not exceed the maximum working stroke
- The stroke reserve length can be freely selected
- The stroke reserve is defined via the "stroke reserve" characteristic in the modular product system.

Example:
Type ELGA-TB-RF-70-500-20H-...

Nominal stroke	= 500 mm
2x stroke reserve	= 40 mm
Working stroke	= 540 mm

(540 mm = 500 mm + 2x 20 mm)

Second moment of area

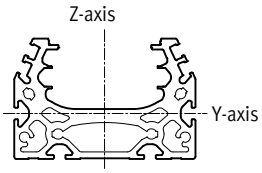

Size		70	80	120
Iy	[mm^4]	1.39x10^5	2.70x10^5	1.42x10^6
Iz	[mm^4]	4.33x10^5	1.02x10^6	5.02x10^6

Maximum permissible support span L (without profile mounting MUE/central support EAHF) as a function of force F

In order to limit deflection in the case of large strokes, the axis may need to be supported.
The following graphs can be used to determine the maximum permissible support span l as a function of force F acting on the axis. The deflection is f = 0.5 mm.

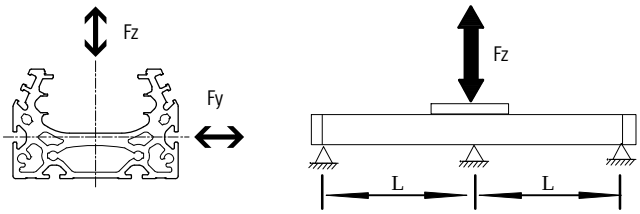

Force Fy

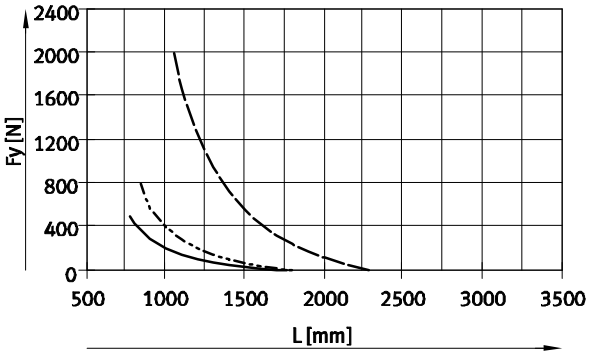

Force Fz

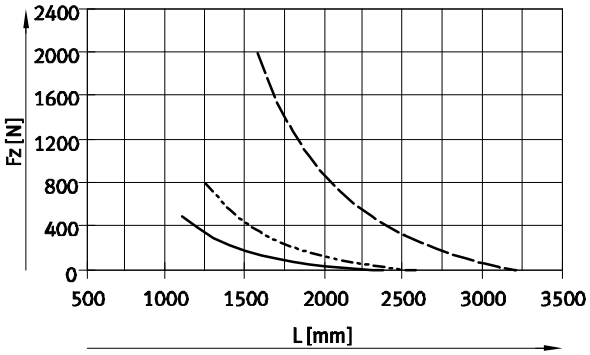

ELGA-TB-RF-70
ELGA-TB-RF-80
ELGA-TB-RF-120

Recommended deflection limits

Adherence to the following deflection limits is recommended so as not to impair the functional performance of the axes. Greater deformation can result in increased friction, greater wear and reduced service life.

Size	Dyn. deflection (moving load)	Stat. deflection (stationary load)
70 … 120	0.05% of the axis length, max. 0.5 mm	0.1% of the axis length

Dimensions Download CAD data ➔ **www.festo.com**

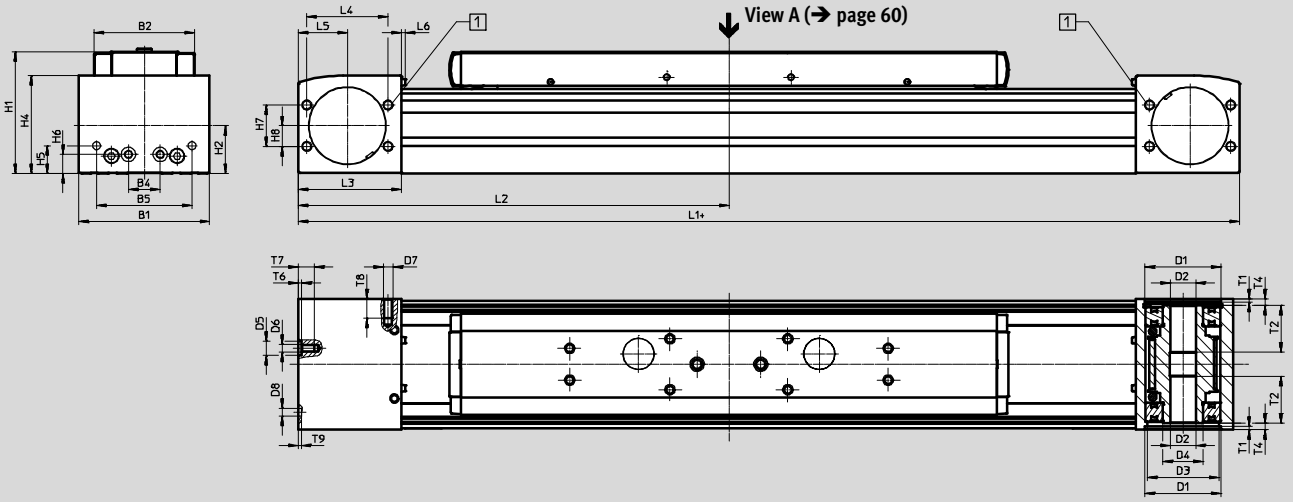

\+ = plus stroke length + 2 x stroke reserve

1 Sealing air connections

Size	B1	B2	B4	B5	D1 ∅ H7	D2 ∅ H7	D3 ∅	D4 ∅	D5 ∅ H7	D6
70	69	48.2	30	45	38	16	34	25	–	M5
80	82	63.2	20	60	48	16	45	25	9	M5
120	120	95	80	40	80	23	72	45	–	M8

Size	D7	D8 ∅ H7	H1	H2	H4	H5	H6	H7	H8	L3
70	M6	5	64	26.5	50.8	13	13	24	12	57.5
80	M6	5	76.5	30	61.5	17.5	12	26	13	65
120	M8	9	111.5	45	91	22	22	59	32	100

Size	L4	L5	L6	T1	T2	T4	T6	T7	T8	T9
70	42	27.5	2.3	2.1	18	7.15	–	10	12	3.1
80	51	31	2.3	2.1	29.5	4	2.1	10.1	12	2
120	76	50	2.5	3.1	29.5	4	–	16	16	2.1

Size	L1			L2		
Slide design	ELGA-...	ELGA-...-S	ELGA-...-L	ELGA-... Min.	ELGA-...-S Min.	ELGA-...-L Min.
70	420	342	520	210	171	260
80	580	496	720	290	248	360
120	775	673	1005	387.5	336.5	502.5

Dimensions Download CAD data ➔ **www.festo.com**

Profile

Size 70

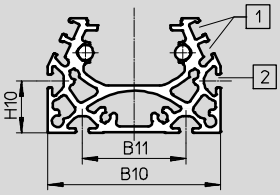

Size 80

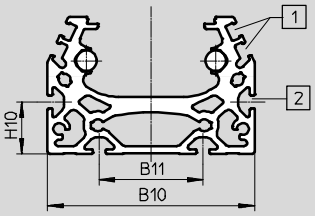

Size 120

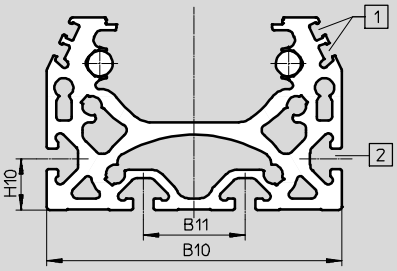

1 Sensor slot for proximity sensor
2 Mounting slot for slot nut:
for size 70, 80: slot nut NST-5-M5
for size 120: slot nut NST-8-M6

Size	B10	B11	H10
70	67	40	20
80	80	40	20
120	116	40	20

Note

Requirements for the flatness of the bearing surface and of attachments as well as for use in parallel structures ➔ www.festo.com/sp
User Documentation

Dimensions Download CAD data ➔ **www.festo.com**

ELGA-... – Standard slide

Size 70

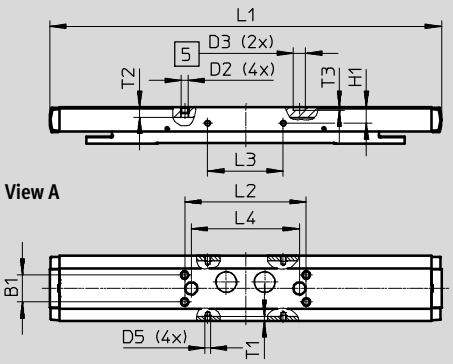

Size 80

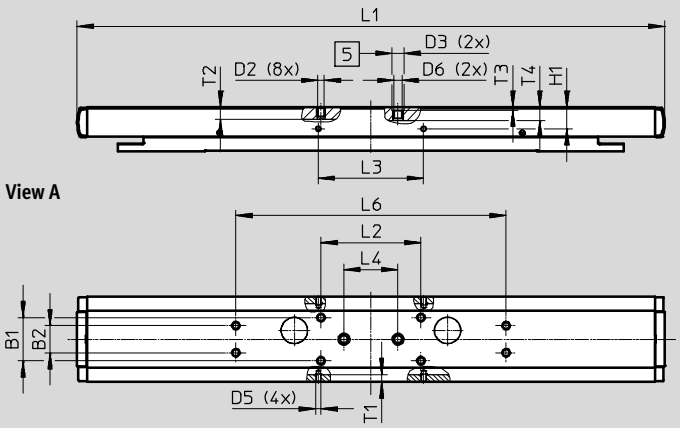

Size 120

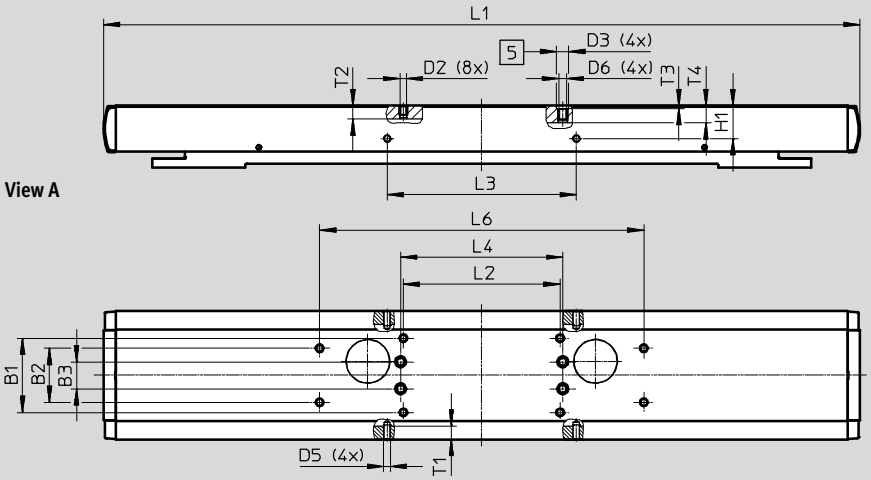

5 Hole for centring sleeve

Size	B1 ±0.1	B2 ±0.1	B3 ±0.1	D2	D3 ∅ H7	D5	D6	H1 ±0.1
70	20	–	–	M5	9	M4	–	11.7
80	32	20	–	M5	9	M4	M6	16
120	55	40	20	M5	9	M5	M6	24.5

Size	L1	L2 ±0.2	L3 ±0.1	L4 ±0.03	L6 ±0.2	T1	T2	T3	T4
70	290	90	56	80	–	3.5	7.5	2.1	–
80	435	74	78	40	200	5.1	9	2.1	9.7
120	560	116	140	120	240	10	10	2.1	12.8

Dimensions Download CAD data ➔ **www.festo.com**

ELGA-...-S – Short slide

Size 70

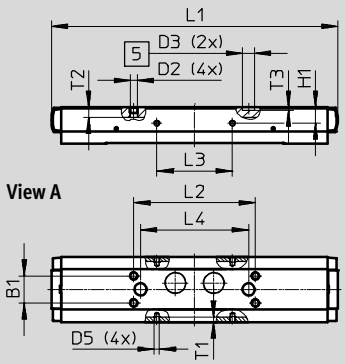

Size 80

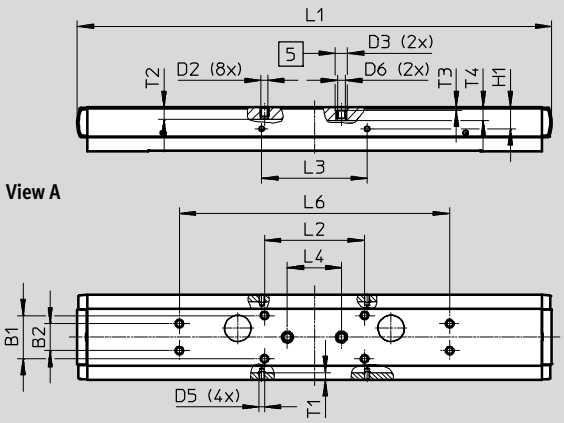

Size 120

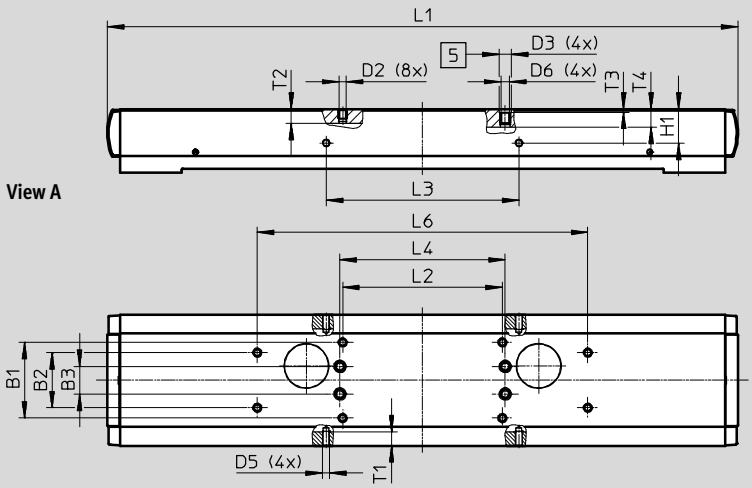

5 Hole for centring sleeve

Size	B1 ±0.1	B2 ±0.1	B3 ±0.1	D2	D3 ∅ H7	D5	D6	H1 ±0.1
70	20	–	–	M5	9	M4	–	11.7
80	32	20	–	M5	9	M4	M6	16
120	55	40	20	M5	9	M5	M6	24.5

Size	L1	L2 ±0.2	L3 ±0.1	L4 ±0.03	L6 ±0.2	T1	T2	T3	T4
70	212	90	56	80	–	3.5	7.5	2.1	–
80	351	74	78	40	200	5.1	9	2.1	9.7
120	458	116	140	120	240	10	10	2.1	12.8

Dimensions Download CAD data ➔ **www.festo.com**

ELGA-...-L – Long slide

Size 70

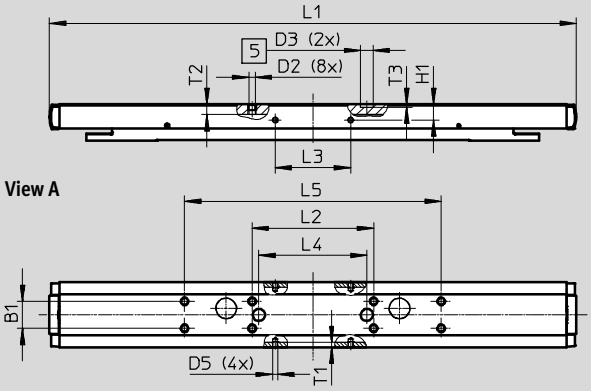

Size 80

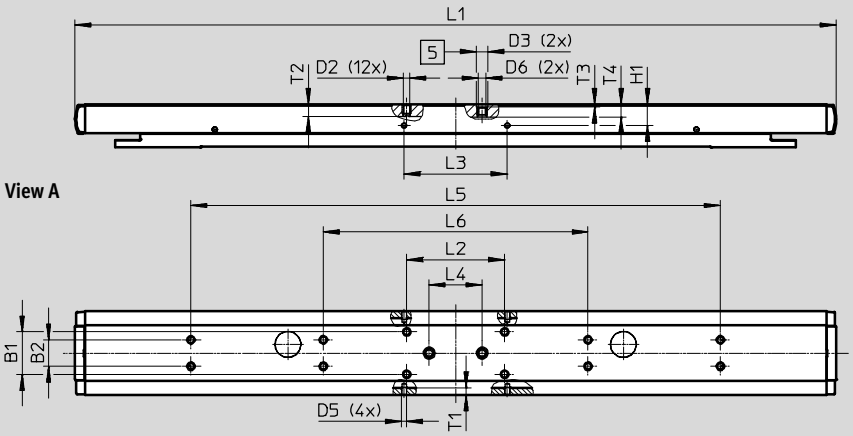

Size 120

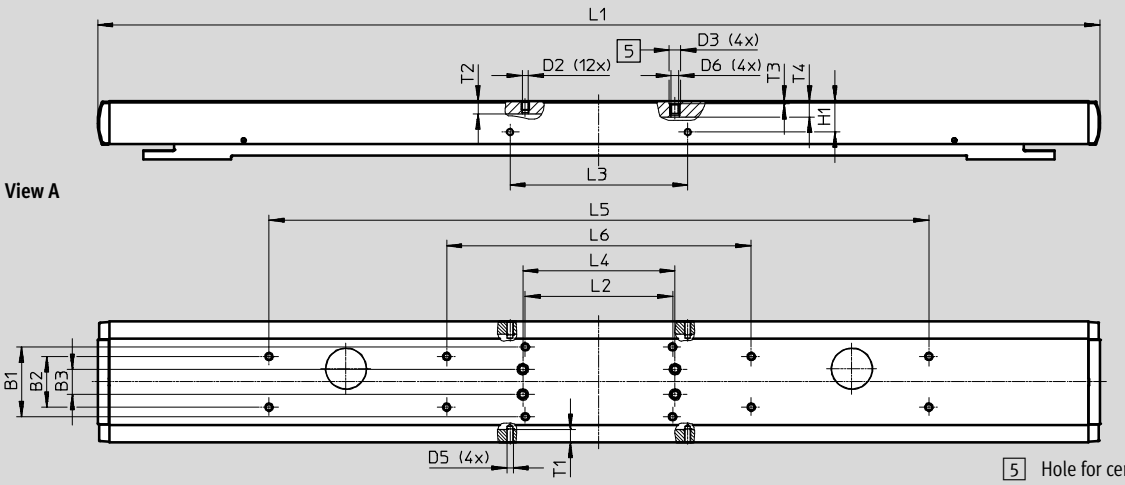

5 Hole for centring sleeve

Toothed belt axes ELGA-TB-RF, with roller bearing guide

Technical data

Size	B1 ±0.1	B2 ±0.1	B3 ±0.1	D2	D3 ∅ H7	D5
70	20	–	–	M5	9	M4
80	32	20	–	M5	9	M4
120	55	40	20	M5	9	M5

Size	D6	H1 ±0.1	L1	L2 ±0.2	L3 ±0.1	L4 ±0.03
70	–	11.7	390	90	56	80
80	M6	16	575	74	78	40
120	M6	24.5	790	116	140	120

Size	L5 ±0.2	L6 ±0.2	T1	T2	T3	T4
70	190	–	3.5	7.5	2.1	–
80	400	200	5.1	9	2.1	9.7
120	520	240	10	10	2.1	12.8

Accessories

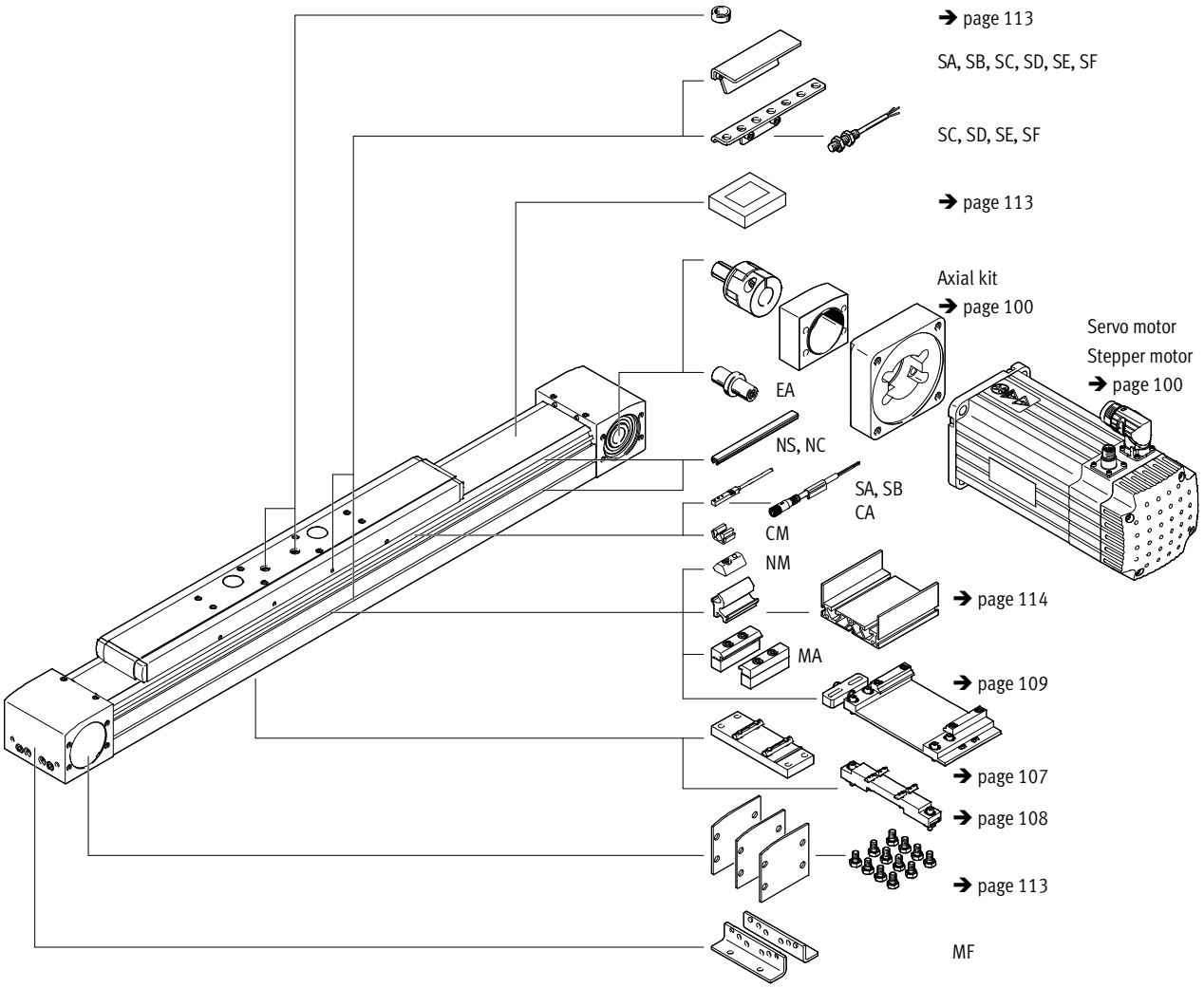

Toothed belt axes ELGA-TB-RF, with roller bearing guide

Ordering data – Modular products

FESTO

Ordering table								
Size		70	80	120	Condi-tions	Code		Entry code
M	Module no.	**1371245**	**1371246**	**1371247**				
	Design	Linear axis				**ELGA**		ELGA
	Function	Toothed belt				☆ **-TB**		-TB
	Guide	Roller bearing guide				☆ **-RF**		-RF
	Size [mm]	70	80	120		☆ **-...**		
	Stroke length [mm]	1 ... 7000	1 ... 7000	1 ... 7400		☆ **-...**		
	Stroke reserve [mm]	0 ... 999 (0 = no stroke reserve)			1	☆ **-...H**		
O	Slide design	Standard slide				☆		
		50 ... 7000	50 ... 7000	50 ... 7400				
		Short slide			2	☆ **-S**		
		50 ... 7000	50 ... 7000	50 ... 7400				
		Long slide				☆ **-L**		
		50 ... 6900	50 ... 6900	50 ... 7200				
	Protection against particles	Standard				☆		
		Without strip cover				☆ **-P0**		
O	Accessories	Accessories enclosed separately				**+**		+
	Foot mounting	1				**MF**		
	Profile mounting	1 ... 50				**...MA**		
	Proximity sensor (SIES), inductive, slot type 8, PNP, incl. switch lug – N/O contact, 7.5 m cable	1 ... 6				**...SA**		
	Proximity sensor (SIES), inductive, slot type 8, PNP, incl. switch lug – N/C contact, 7.5 m cable	1 ... 6				**...SB**		
	Proximity sensor (SIEN), inductive, M8, PNP, incl. switch lug with sensor bracket – N/O contact, 2.5 m cable	1 ... 99				**...SC**		
	Proximity sensor (SIEN), inductive, M8, PNP, incl. switch lug with sensor bracket – N/C contact, 2.5 m cable	1 ... 99				**...SD**		
	Proximity sensor (SIEN), inductive, M8, PNP, incl. switch lug with sensor bracket – N/O contact, plug M8	1 ... 99				**...SE**		
	Proximity sensor (SIEN), inductive, M8, PNP, incl. switch lug with sensor bracket – N/C contact, plug M8	1 ... 99				**...SF**		
	Connecting cable 2.5 m, M8, 3-wire	1 ... 99				**...CA**		
	Sensor slot cover	1 ... 50 (1 = 2 units, 500 mm length)				**...NS**		
	Mounting slot cover	1 ... 50 (1 = 2 units, 500 mm length)				**...NC**		
	Slot nut for mounting slot	1 ... 99				**...NM**		
	Clip for sensor slot	10, 20, 30, 40, 50, 60, 70, 80, 90				**...CM**		
	Drive shaft	1 ... 4				**...EA**		
	Operating instructions	With operating instructions						
		Without operating instructions				**-DN**		

1 **... H** The sum of the nominal stroke and 2x stroke reserve must be at least 50 mm and must not exceed the maximum stroke length

2 **S** Only with P0

The code SA, SB includes a switch lug in the scope of delivery.	The code SC, SD, SE, SF includes one switch lug and max. two sensor brackets in the scope of delivery.

M Mandatory data

O Options

Transfer order code

		ELGA	–	TB	–	RF	–		–		–		–		–		+		–	

Festo core product range	★ Ready for dispatch from the Festo factory in 24 hours ☆ Ready for dispatch in 5 days maximum from stock

Toothed belt axes ELGA-TB-RF-F1, with roller bearing guide

Peripherals overview – For the food zone

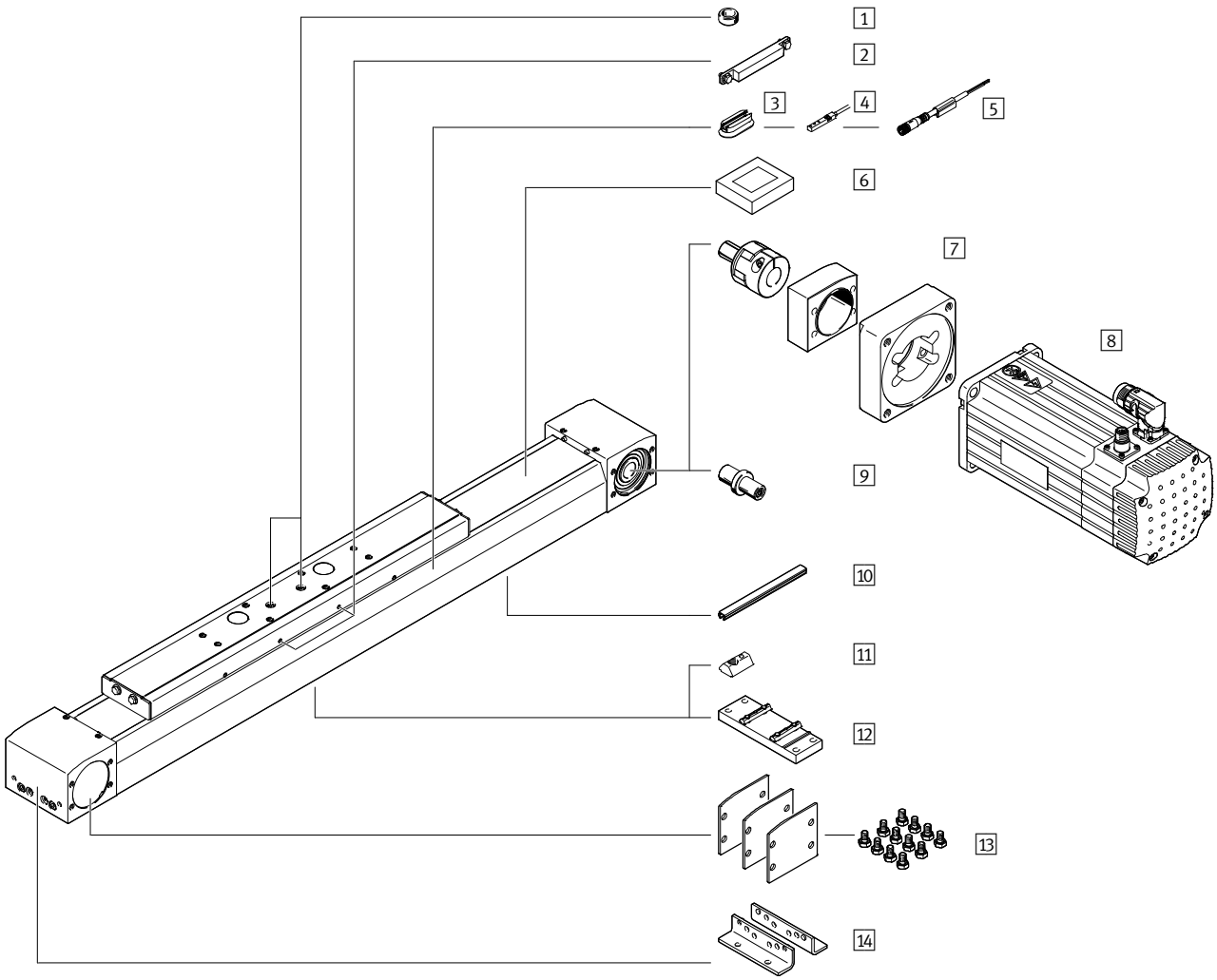

Slide variants		
ELGA-...-F1 Standard slide	ELGA-...-S-F1 Short slide	ELGA-...-L-F1 Long slide

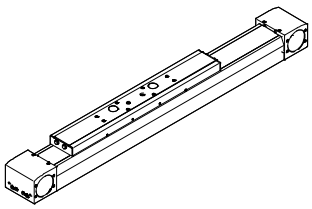

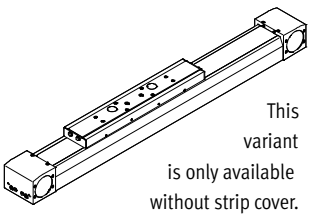

This variant is only available without strip cover.

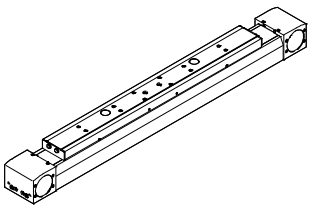

Accessories			
	Type/order code	Description	➔ Page/Internet
1	Centring pin/sleeve ZBS, ZBH	• For centring loads and attachments on the slide • 2 centring pins/sleeves included in the scope of delivery of the axis	113
2	Switch lug EAPM	For sensing the slide position	112
3	Mounting kit CRSMB	For mounting the proximity sensors on the axis	112
4	Proximity sensor, T-slot SME-8M	For sensing the slide position	115
5	Connecting cable NEBU	For proximity sensor	115
6	Clamping component EADT	Tool for retensioning the cover strip	113
7	Axial kit EAMM	For axial motor mounting (comprises: coupling, coupling housing and motor flange)	100
8	Motor EMME, EMMS	Motors specially matched to the axis, with or without gear unit, with or without brake	100
9	Drive shaft EA	• Can, if required, be used as an alternative interface • No drive shaft is required for the axis/motor combinations ➔ page 100	104
10	Slot cover NC	• For protection against the ingress of dirt	113
11	Slot nut NM	For mounting attachments	113
12	Central support EAHF-L5	For mounting the axis from underneath on the profile	107
13	Cover kit EASC-L5	For covering the sides of the drive cover	113
14	Foot mounting MF	For mounting the axis on the end cap	105

Toothed belt axes ELGA-TB-RF-F1, with roller bearing guide

Type codes – For the food zone

ELGA	–	TB	–	RF	–	70	–	800	–	20H	–		–		–	F1	–	PU1

Type	
ELGA	Toothed belt axis

Drive function	
TB	Toothed belt

Guide	
RF	Roller bearing guide

Size

Stroke [mm]

Stroke reserve

Slide design	
–	Standard slide
S	Short slide
L	Long slide

Protection against particles	
–	Standard
P0	Without strip cover

Additional features	
F1	Suitable for use in the food industry as per extended information on materials

Toothed belt material	
PU1	Uncoated PU

➔	+	MF	–	

Accessories enclosed separately	
MF	Foot mounting
...NC	Mounting slot cover
...NM	Slot nut for mounting slot
...EA	Drive shaft

Operating instructions	
–	With operating instructions
DN	Without operating instructions

Toothed belt axes ELGA-TB-RF-F1, with roller bearing guide

Technical data – For the food zone

Function

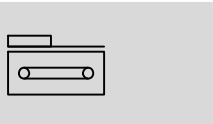

Size
70 … 120

Stroke length
50 … 7400 mm

www.festo.com

General technical data				
Size		70	80	120
Design		Electromechanical axis with toothed belt		
Guide		Roller bearing guide		
Mounting position		Any		
Working stroke				
ELGA-…	[mm]	50 … 7000	50 … 7000	50 … 7400
ELGA-…-S	[mm]	50 … 7000	50 … 7000	50 … 7400
ELGA-…-L	[mm]	50 … 6900	50 … 6900	50 … 7200
Max. feed force F_x	[N]	260	600	1000
Max. no-load torque[1]	[Nm]	1.03	1.93	5.67
Max. no-load resistance to shifting[1]	[N]	72	97	216
Max. driving torque	[Nm]	3.7	11.9	26.2
Max. speed	[m/s]	10		
Max. acceleration	[m/s²]	50		
Repetition accuracy	[mm]	±0.08		

1) At 0.2 m/s

Operating and environmental conditions		
Ambient temperature[1]	[°C]	–10 … +60
Degree of protection		
ELGA-…		IP40
ELGA-…-P0		IP00
Duty cycle	[%]	100
Food-safe[2]		➔ Further information on materials

1) Note operating range of proximity sensors.
2) Additional information www.festo.com/sp ➔ Certificates.

Weight [kg]			
Size	70	80	120
Basic weight with 0 mm stroke[1]			
ELGA-…	2.81	6.17	17.17
ELGA-…-S	2.43	5.56	15.65
ELGA-…-L	3.38	7.36	21.11
Additional weight per 1000 mm stroke			
ELGA-…	3.36	4.87	10.34
ELGA-…-P0	3.24	4.77	10.19
Moving load			
ELGA-…	0.82	2.04	5.14
ELGA-…-S	0.75	1.97	4.87
ELGA-…-L	1.04	2.55	6.69

1) Incl. slide

Toothed belt axes ELGA-TB-RF-F1, with roller bearing guide

Technical data – For the food zone

Toothed belt				
Size		70	80	120
Pitch	[mm]	3	5	5
Expansion[1)]	[%]	0.09	0.09	0.09
Effective diameter	[mm]	28.65	39.79	52.52
Feed constant	[mm/rev]	90	125	165

1) At max. feed force

Mass moment of inertia				
Size		70	80	120
J_O				
ELGA-...	[kg mm²]	237	1062	4937
ELGA-...-S	[kg mm²]	209	975	4554
ELGA-...-L	[kg mm²]	282	1265	6008
J_H per metre stroke	[kg mm²/m]	23	110	264
J_L per kg payload	[kg mm²/kg]	205	396	690

The mass moment of inertia J_A of the entire axis is calculated as follows:

$$J_A = J_O + J_H \times \text{working stroke [m]} + J_L \times m_{payload} \text{ [kg]}$$

Materials

Sectional view

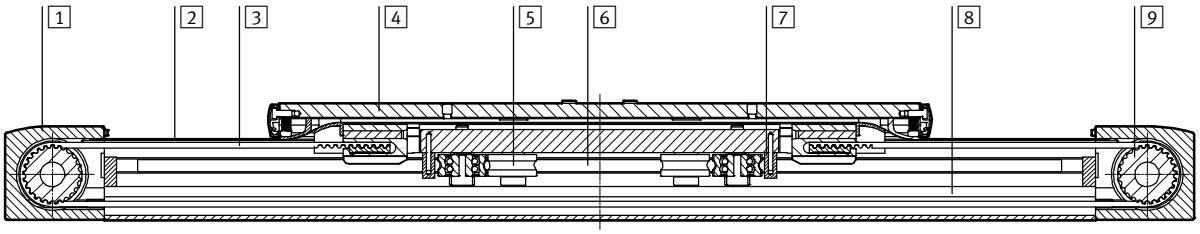

Axis		
1	Drive cover	Anodised wrought aluminium alloy
2	Cover strip	Stainless steel
3	Toothed belt	Polyurethane with steel cord
4	Slide	Anodised wrought aluminium alloy
5	Guide roller	Hardened rolled steel (lubricant approved for the food zone)
6	Guide rod	Hardened tempered steel
7	Wiper ring	Oil-impregnated felt (lubricating oil approved for the food zone)
8	Profile	Anodised wrought aluminium alloy
9	Toothed belt pulley	High-alloy stainless steel
	Note on materials	RoHS-compliant
		Contains paint-wetting impairment substances

Toothed belt axes ELGA-TB-RF-F1, with roller bearing guide

Technical data – For the food zone

Characteristic load values

The indicated forces and torques refer to the slide surface. The point of application of force is the point where the centre of the guide and the longitudinal centre of the slide intersect. These values must not be exceeded during dynamic operation. Special attention must be paid to the cushioning phase.

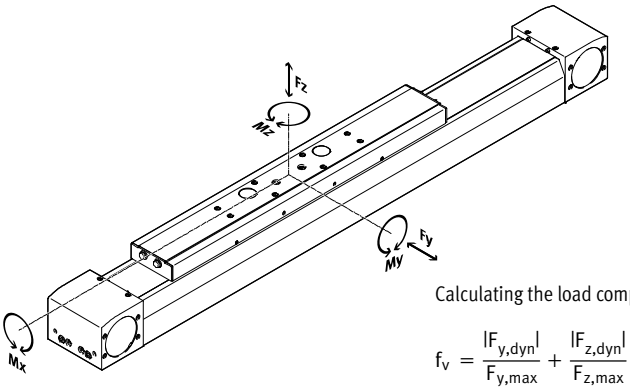

If the axis is subjected to two or more of the indicated forces and torques simultaneously, the following equation must be satisfied in addition to the indicated maximum loads:

Calculating the load comparison factor:

$$f_v = \frac{|F_{y,dyn}|}{F_{y,max}} + \frac{|F_{z,dyn}|}{F_{z,max}} + \frac{|M_{x,dyn}|}{M_{x,max}} + \frac{|M_{y,dyn}|}{M_{y,max}} + \frac{|M_{z,dyn}|}{M_{z,max}} \leqq 1$$

Max. permissible forces and torques for a service life of 10000 km				
Size		70	80	120
$Fy_{max.}$	[N]	400	640	1600
Fz_{max}	[N]	400	640	1600
$Mx_{max.}$	[Nm]	8.8	24	80
$My_{max.}$				
ELGA-...	[Nm]	16	72	256
ELGA-...-S	[Nm]	16	72	256
ELGA-...-L	[Nm]	32	144	512
$Mz_{max.}$				
ELGA-...	[Nm]	16	72	256
ELGA-...-S	[Nm]	16	72	256
ELGA-...-L	[Nm]	32	144	512

Calculating the service life

The service life of the guide depends on the load. To provide a rough indication of the service life of the guide, the graph below plots the load comparison factor f_v against the service life.

These values are only theoretical. You must consult your local contact person at Festo for load comparison factors f_v greater than 1.5.

Load comparison factor f_v as a function of service life

Example:
A user wants to move an X kg load. Using the formula ➔ page 72 gives a value of 1.5 for the load comparison factor f_v. According to the graph, the guide would have a service life of approx. 3000 km. Reducing the acceleration reduces the Mz and My values. A load comparison factor f_v of 1 now gives a service life of 10000 km.

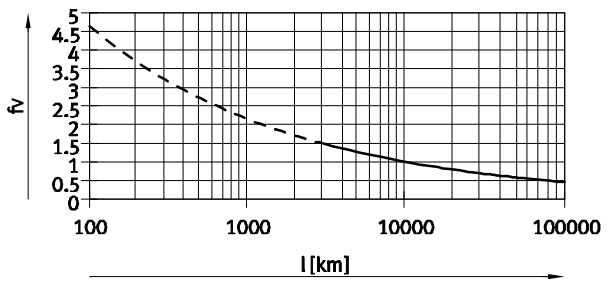

Note

PositioningDrives engineering software www.festo.com

The software can be used to calculate a guide workload for a service life of 10000 km.

$f_v > 1.5$ are only theoretical comparison values for the roller bearing guide.

Max. acceleration a as a function of payload m

Size 70

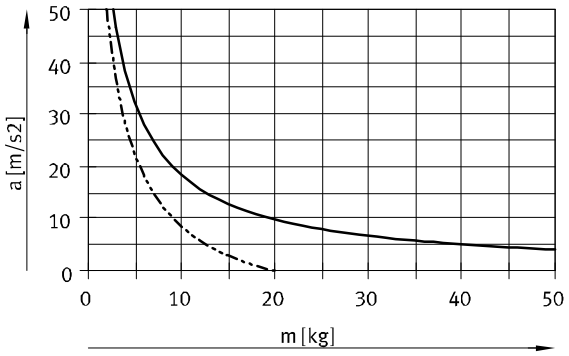

Size 80

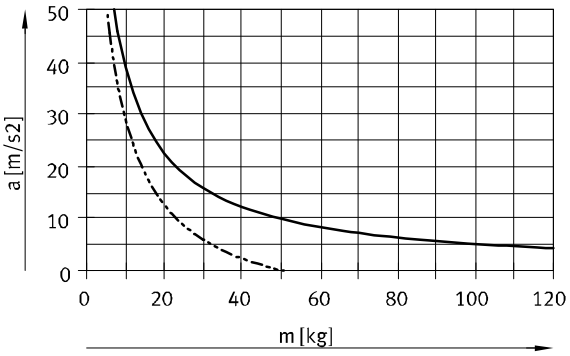

Size 120

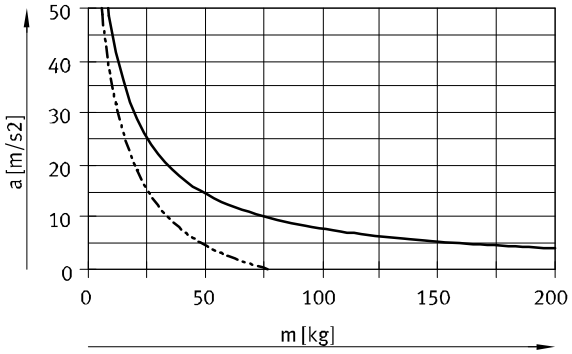

Horizontal
Vertical

Speed v as a function of rotational speed n

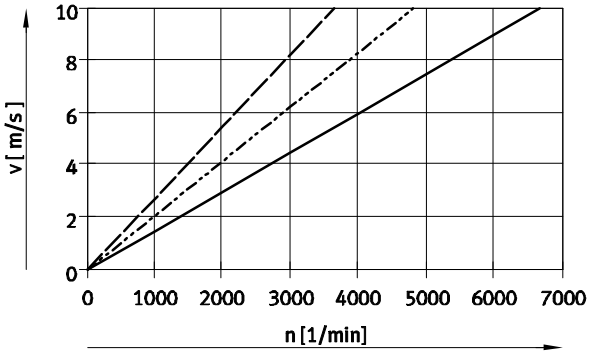

ELGA-TB-RF-70
ELGA-TB-RF-80
ELGA-TB-RF-120

Theoretical feed force F as a function of input torque M

Size 70

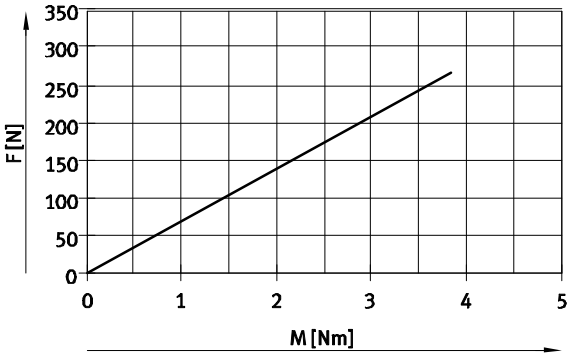

ELGA-TB-RF-70

Size 80/120

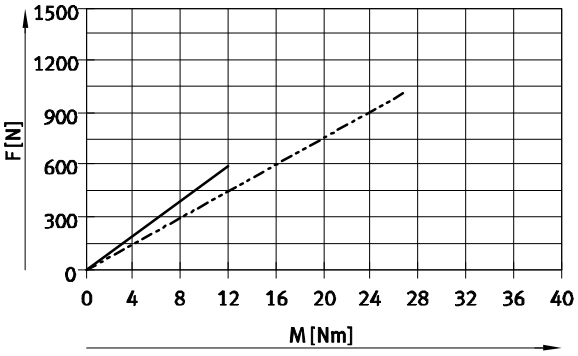

ELGA-TB-RF-80

ELGA-TB-RF-120

Stroke reserve

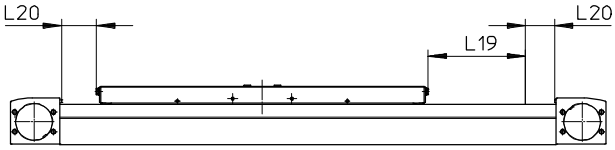

L19 = Nominal stroke

L20 = Stroke reserve

- The stroke reserve is a safety distance which is generally not used as work space
- The sum of the nominal stroke and 2x stroke reserve must not exceed the maximum working stroke
- The stroke reserve length can be freely selected
- The stroke reserve is defined via the "stroke reserve" characteristic in the modular product system.

Example:

Type ELGA-TB-RF-70-500-20H-...

Nominal stroke	= 500 mm
2x stroke reserve	= 40 mm
Working stroke	= 540 mm

(540 mm = 500 mm + 2x 20 mm)

Second moment of area

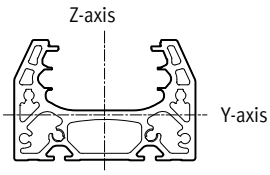

Size		70	80	120
Iy	[mm^4]	1.48x10^5	2.77x10^5	1.32x10^6
Iz	[mm^4]	4.52x10^5	1.00x10^6	4.74x10^6

Maximum permissible support span L (without central support EAHF) as a function of force F

In order to limit deflection in the case of large strokes, the axis may need to be supported.
The following graphs can be used to determine the maximum permissible support span l as a function of force F acting on the axis. The deflection is f = 0.5 mm.

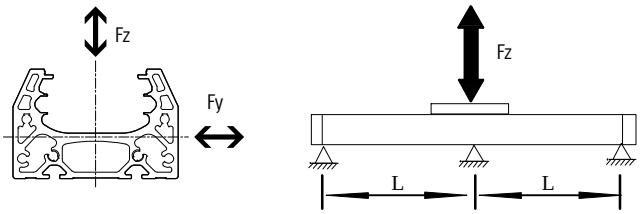

Force Fy

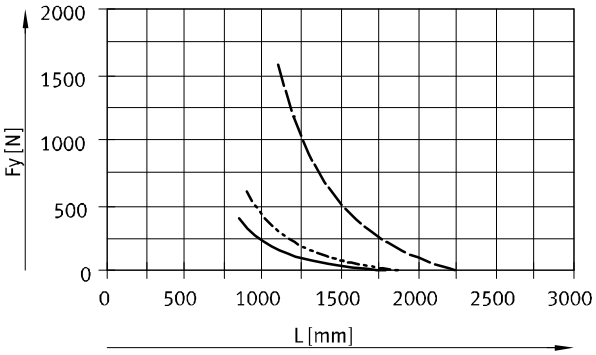

Force Fz

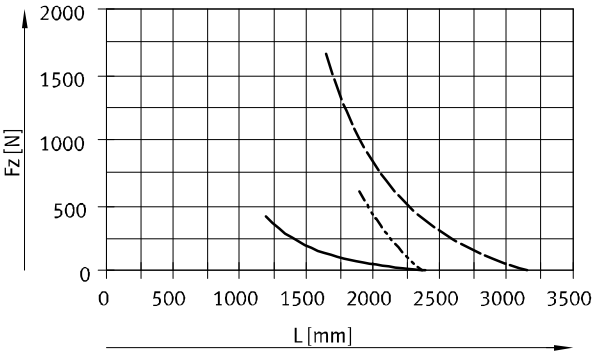

ELGA-TB-RF-70
ELGA-TB-RF-80
ELGA-TB-RF-120

Recommended deflection limits

Adherence to the following deflection limits is recommended so as not to impair the functional performance of the axes. Greater deformation can result in increased friction, greater wear and reduced service life.

Size	Dyn. deflection (moving load)	Stat. deflection (stationary load)
70 … 120	0.05% of the axis length, max. 0.5 mm	0.1% of the axis length

Dimensions Download CAD data ➔ **www.festo.com**

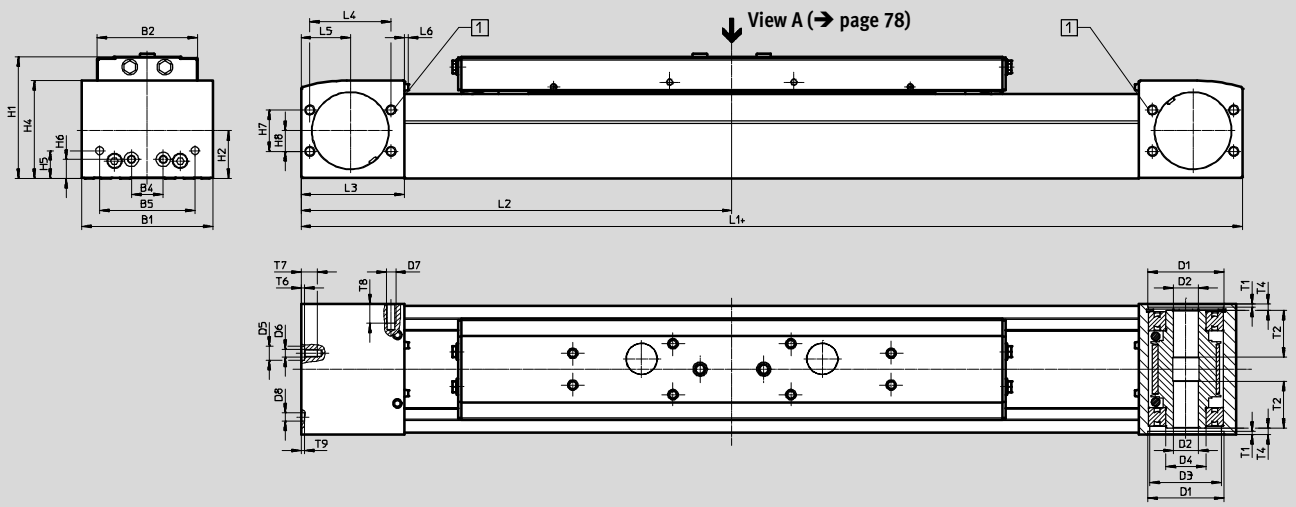

\+ = plus stroke length + 2 x stroke reserve

1 Sealing air connections

Size	B1	B2	B4	B5	D1 ∅ H7	D2 ∅ H7	D3 ∅	D4 ∅	D5 ∅ H7	D6
70	69	48.2	30	45	38	16	34	25	–	M5
80	82	63.2	20	60	48	16	45	25	9	M5
120	120	95	80	40	80	23	72	45	–	M 8

Size	D7	D8 ∅ H7	H1	H2	H4	H5	H6	H7	H8	L3
70	M6	5	64	26.5	50.8	13	13	24	12	57.5
80	M6	5	76.5	30	61.5	17.5	12	26	13	65
120	M 8	9	111.5	45	91	22	22	59	32	100

Size	L4	L5	L6	T1	T2	T4	T6	T7	T8	T9
70	42	27.5	2.3	2.1	18	7.15	–	10	12	3.1
80	51	31	2.3	2.1	29.5	4	2.1	10.1	12	2
120	76	50	2.5	3.1	29.5	4	–	16	16	2.1

Size	L1			L2		
Slide design	ELGA-...	ELGA-...-S	ELGA-...-L	ELGA-... Min.	ELGA-...-S Min.	ELGA-...-L Min.
70	420	342	520	210	171	260
80	580	496	720	290	248	360
120	775	673	1005	387.5	336.5	502.5

Dimensions Download CAD data ➔ **www.festo.com**

Profile

Size 70

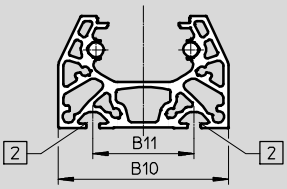

Size 80

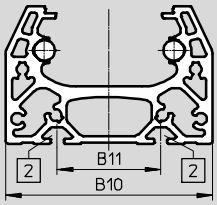

Size 120

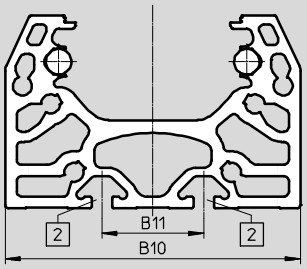

2 Mounting slot for slot nut:
for size 70, 80: slot nut NST-5-M5
for size 120: slot nut NST-8-M6

Size	B10	B11
70	67	40
80	80	40
120	116	40

Note

Requirements for the flatness of the bearing surface and of attachments as well as for use in parallel structures ➔ www.festo.com/sp User Documentation

Dimensions Download CAD data ➔ **www.festo.com**

ELGA-... – Standard slide

Size 70

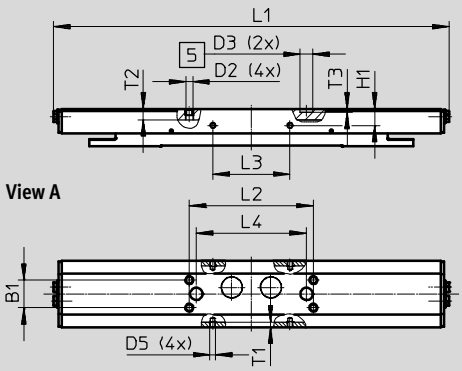

Size 80

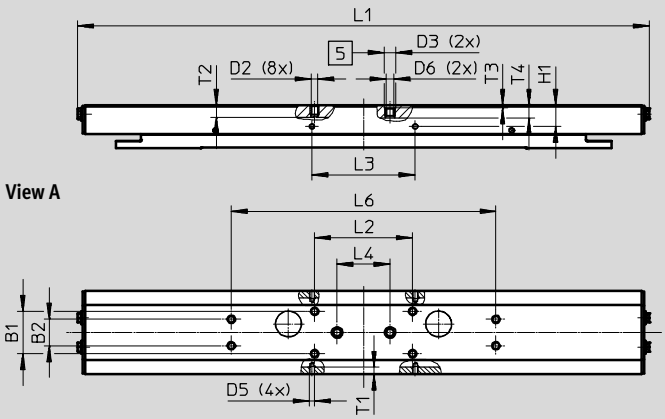

Size 120

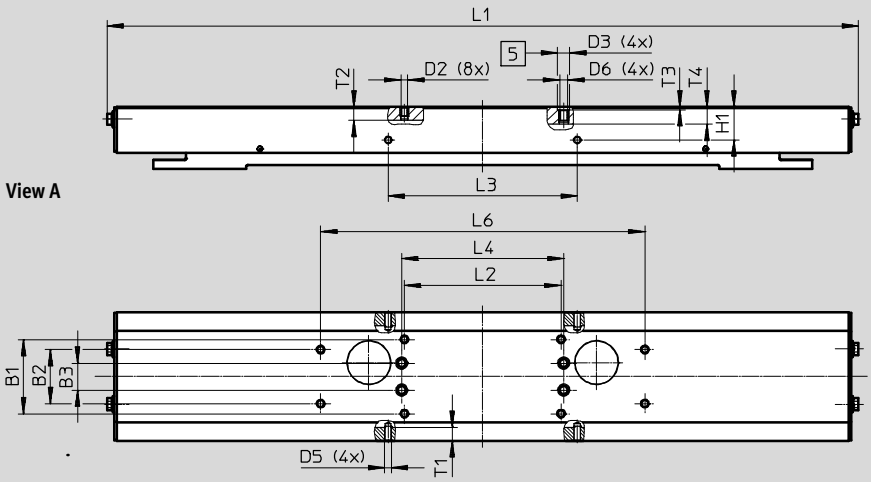

5 Hole for centring sleeve

Size	B1 ±0.1	B2 ±0.1	B3 ±0.1	D2	D3 ∅ H7	D5	D6	H1 ±0.1
70	20	–	–	M5	9	M4	–	11.7
80	32	20	–	M5	9	M4	M6	16
120	55	40	20	M5	9	M5	M6	24.5

Size	L1	L2 ±0.2	L3 ±...≥1	L4 ±0.03	L6 ±0.2	T1	T2	T3	T4
70	290	90	56	80	–	3.5	7.5	2.1	–
80	435	74	78	40	200	5.1	9	2.1	9.7
120	560	116	140	120	240	10	10	2.1	12.8

Dimensions Download CAD data ➔ **www.festo.com**

ELGA-...-S – Short slide

Size 70

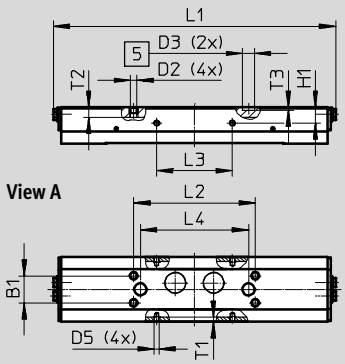

Size 80

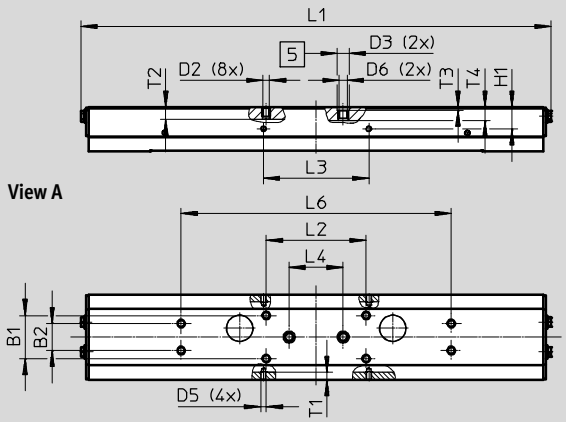

Size 120

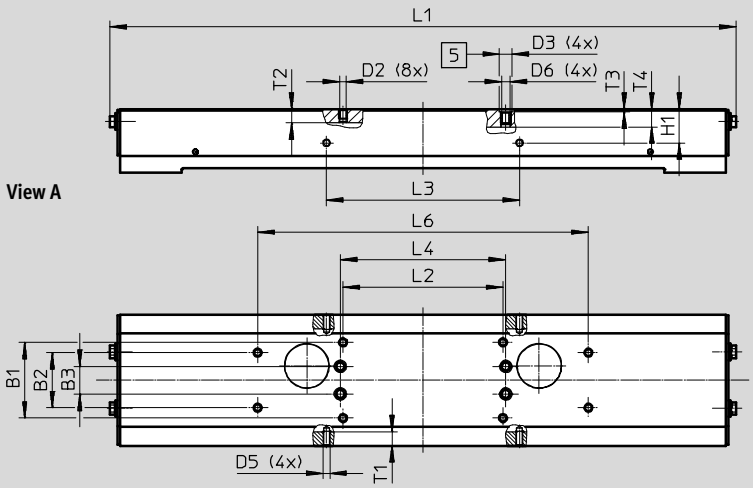

5 Hole for centring sleeve

Size	B1 ±0.1	B2 ±0.1	B3 ±0.1	D2	D3 ∅ H7	D5	D6	H1 ±0.1
70	20	–	–	M5	9	M4	–	11.7
80	32	20	–	M5	9	M4	M6	16
120	55	40	20	M5	9	M5	M6	24.5

Size	L1	L2 ±0.2	L3 ±...≥1	L4 ±0.03	L6 ±0.2	T1	T2	T3	T4
70	212	90	56	80	–	3.5	7.5	2.1	–
80	351	74	78	40	200	5.1	9	2.1	9.7
120	458	116	140	120	240	10	10	2.1	12.8

Dimensions Download CAD data ➔ **www.festo.com**

ELGA-...-L – Long slide

Size 70

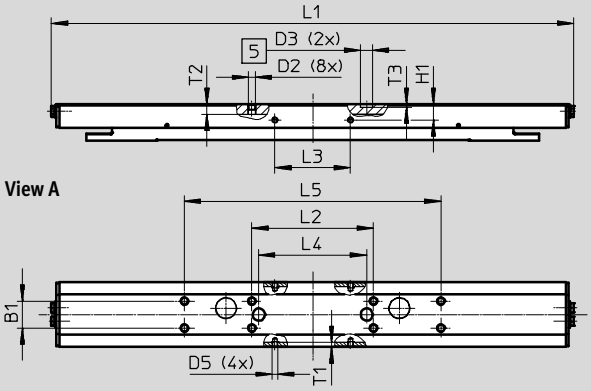

Size 80

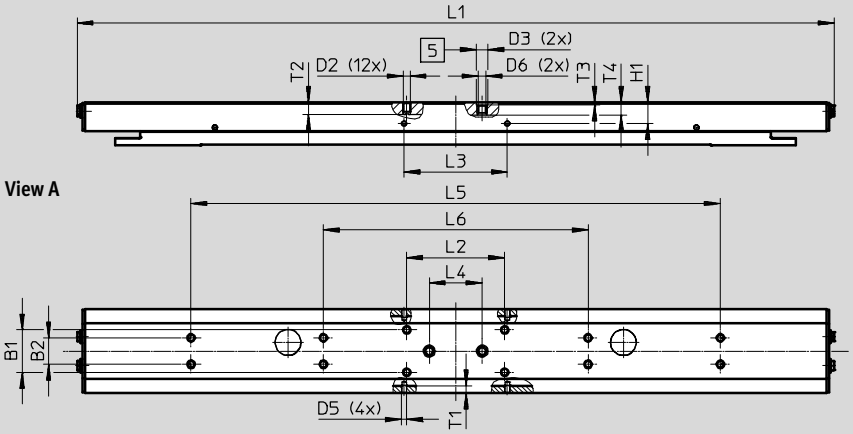

Size 120

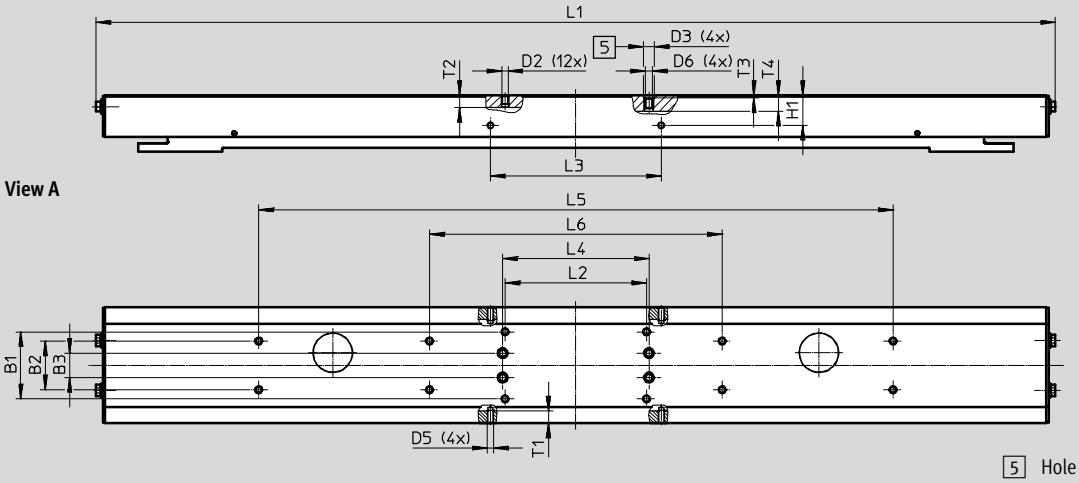

5 Hole for centring sleeve

Toothed belt axes ELGA-TB-RF-F1, with roller bearing guide

Technical data – For the food zone

Size	B1 ±0.1	B2 ±0.1	B3 ±0.1	D2	D3 ∅ H7	D5
70	20	–	–	M5	9	M4
80	32	20	–	M5	9	M4
120	55	40	20	M5	9	M5

Size	D6	H1 ±0.1	L1	L2 ±0.2	L3 ±…≥1	L4 ±0.03
70	–	11.7	390	90	56	80
80	M6	16	575	74	78	40
120	M6	24.5	790	116	140	120

Size	L5 ±0.2	L6 ±0.2	T1	T2	T3	T4
70	190	–	3.5	7.5	2.1	–
80	400	200	5.1	9	2.1	9.7
120	520	240	10	10	2.1	12.8

Accessories

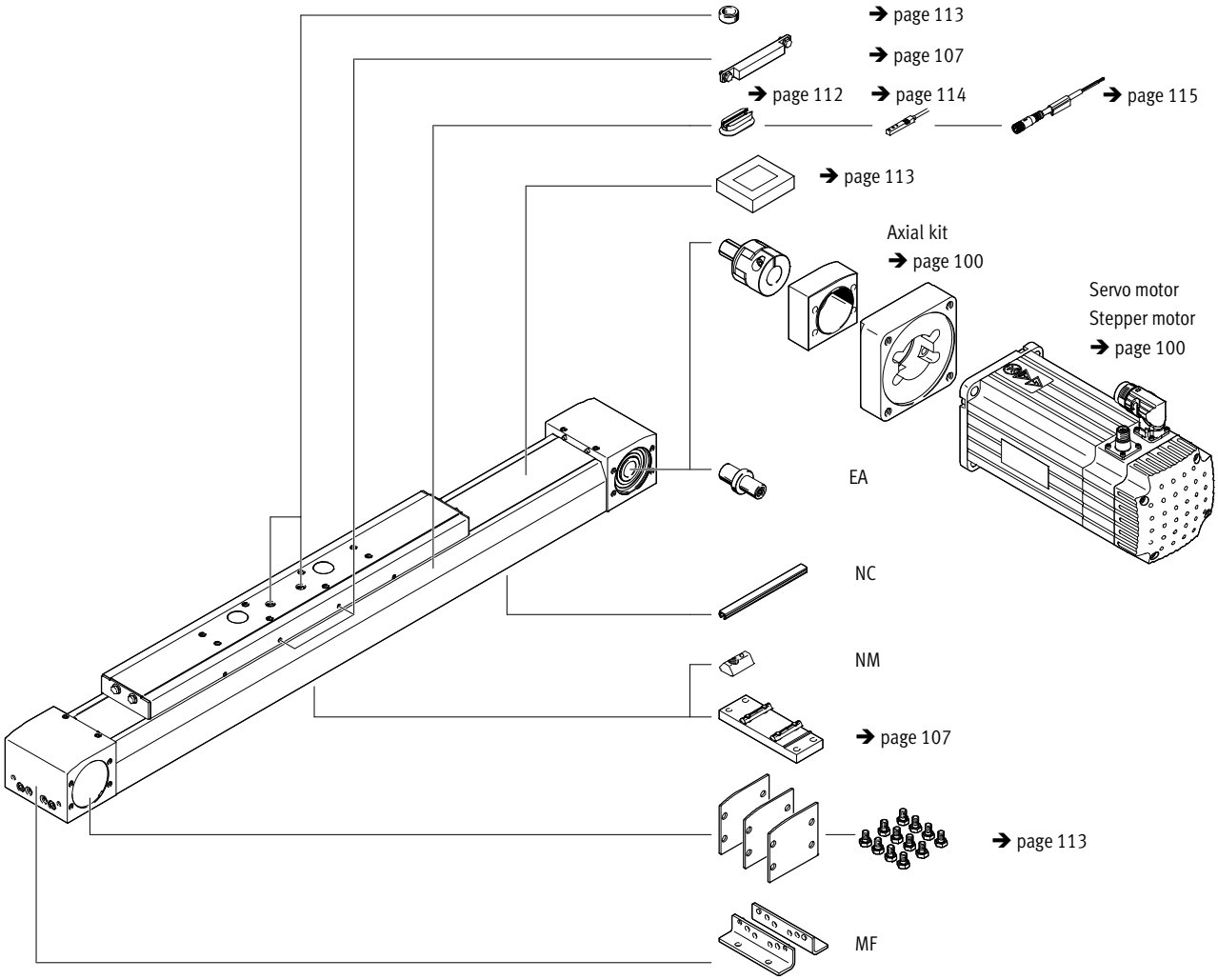

Toothed belt axes ELGA-TB-RF-F1, with roller bearing guide

Ordering data – Modular products – For the food zone

Ordering table								
Size		70	80	120	Condi-tions	Code		Entry code
M	Module no.	**1371245**	**1371246**	**1371247**				
	Design	Linear axis				**ELGA**		ELGA
	Function	Toothed belt				**-TB**		-TB
	Guide	Roller bearing guide				**-RF**		-RF
	Size [mm]	70	80	120		**-...**		
	Stroke length [mm]	1 ... 7000	1 ... 7000	1 ... 7400		**-...**		
	Stroke reserve [mm]	0 ... 999 (0 = no stroke reserve)			1	**-...H**		
O	Slide design	Standard slide						
		1 ... 7000	1 ... 7000	1 ... 7400				
		Short slide			2	**-S**		
		1 ... 7000	1 ... 7000	1 ... 7400				
		Long slide				**-L**		
		1 ... 6900	1 ... 6900	1 ... 7200				
	Protection against particles	Standard						
		Without strip cover				**-P0**		
	Additional features	Suitable for use in the food industry as per extended information on materials				**-F1**		-F1
	Toothed belt material	Uncoated PU				**-PU1**		-PU1
O	Accessories	Accessories enclosed separately				**+**		+
	Foot mounting	1				**MF**		
	Mounting slot cover	1 ... 50 (1 = 2 units, 500 mm length)				**...NC**		
	Slot nut for mounting slot	1 ... 99				**...NM**		
	Drive shaft	1 ... 4				**...EA**		
	Operating instructions	With operating instructions						
		Without operating instructions				**-DN**		

1 **... H** The sum of the nominal stroke and 2x stroke reserve must be at least 50 mm and must not exceed the maximum stroke length

2 **S** Only with P0

M Mandatory data

O Options

Transfer order code

	ELGA	–	TB	–	RF	–		–		–		–		–		–	F1	–	PU1	+		–	

Toothed belt axes ELGA-TB-G, with plain-bearing guide

Peripherals overview

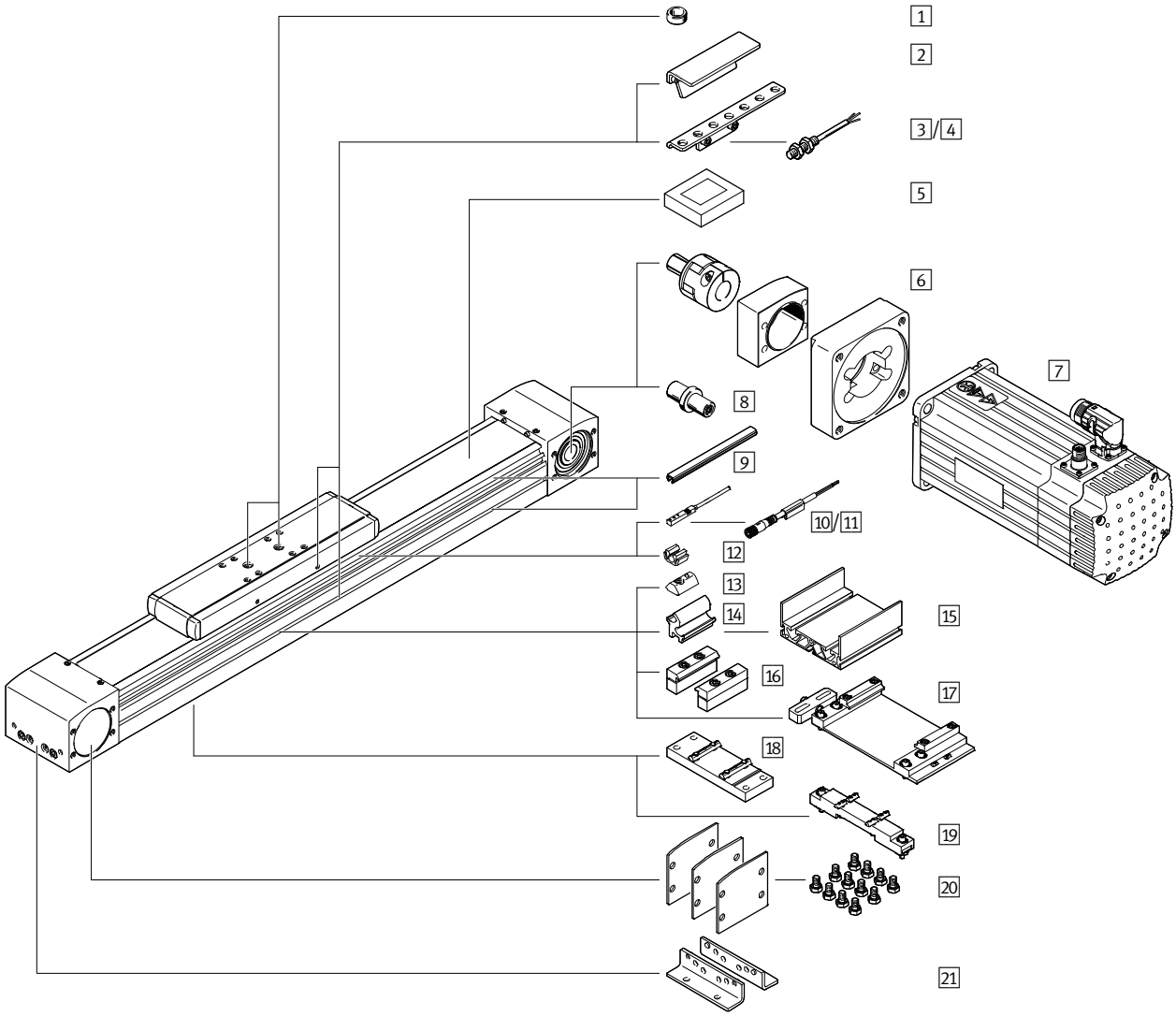

Toothed belt axes ELGA-TB-G, with plain-bearing guide

Peripherals overview

Accessories			
	Type/order code	Description	➔ Page/Internet
1	Centring pin/sleeve ZBS, ZBH	• For centring loads and attachments on the slide • 2 centring pins/sleeves included in the scope of delivery of the axis	113
2	Switch lug SA, SB, SC, SD, SE, SF	For sensing the slide position	110
3	Sensor bracket SC, SD, SE, SF	For mounting the inductive proximity sensors (round design) on the axis	111
4	Proximity sensor, M8 SC, SD, SE, SF	• Inductive proximity sensor, round design • The order code SC, SD, SE, SF includes 1 switch lug and max. 2 sensor brackets in the scope of delivery	115
5	Clamping component EADT	Tool for retensioning the cover strip	113
6	Axial kit EAMM	For axial motor mounting (comprises: coupling, coupling housing and motor flange)	100
7	Motor EMME, EMMS	Motors specially matched to the axis, with or without gear unit, with or without brake	100
8	Drive shaft EA	• Can, if required, be used as an alternative interface • No drive shaft is required for the axis/motor combinations ➔ page 100	104
9	Slot cover NS, NC	• For protection against the ingress of dirt	113
10	Proximity sensor, T-slot SA, SB	• Inductive proximity sensor, for T-slot • The order code SA, SB includes 1 switch lug in the scope of delivery	114
11	Connecting cable CA	For proximity sensor (order code SE and SF)	115
12	Clip CM	For mounting the proximity sensor cable in the slot	113
13	Slot nut NM	For mounting attachments	113
14	Adapter kit DHAM	For mounting the support profile on the axis	114
15	Support profile HMIA	For mounting and guiding an energy chain	114
16	Profile mounting MA	For mounting the axis on the side of the profile	106
17	Adjusting kit EADC-E16	Used to mount the axis on a vertical surface. Following mounting, the axis can be aligned horizontally	109
18	Central support EAHF-L5	For mounting the axis from underneath on the profile	107
19	Adjusting kit EADC-E15	It is height-adjustable. Can be used to compensate any unevenness in the bearing surface	108
20	Cover kit EASC-L5	For covering the sides of the drive cover	113
21	Foot mounting MF	• For mounting the axis on the end cap • With higher forces and torques, the axis should be mounted using the profile	105

Toothed belt axes ELGA-TB-G, with plain-bearing guide

Type codes

ELGA	–	TB	–	G	–	70	–	800	–	20H	–	

Type	
ELGA	Toothed belt axis

Drive function	
TB	Toothed belt

Guide	
G	Plain-bearing guide

Size

Stroke [mm]

Stroke reserve

Protection against particles	
–	Standard
P0	Without strip cover

➔	+	MF2SA	–	

Accessories enclosed separately	
MF	Foot mounting
...MA	Profile mounting
...SA	Proximity sensor (SIES), inductive, slot type 8, PNP, N/O contact, 7.5 m cable
...SB	Proximity sensor (SIES), inductive, slot type 8, PNP, N/C contact, 7.5 m cable
...SC	Proximity sensor (SIEN), inductive, M8, PNP, N/O contact, 2.5 m cable
...SD	Proximity sensor (SIEN), inductive, M8, PNP, N/C contact, 2.5 m cable
...SE	Proximity sensor (SIEN), inductive, M8, PNP, N/O contact, plug connector M8
...SF	Proximity sensor (SIEN), inductive, M8, PNP, N/C contact, plug connector M8
...CA	Connecting cable
...NS	Sensor slot cover
...NC	Mounting slot cover
...NM	Slot nut for mounting slot
...CM	Cable clip
...EA	Drive shaft

Operating instructions	
–	With operating instructions
DN	Without operating instructions

Toothed belt axes ELGA-TB-G, with plain-bearing guide

Technical data

Function

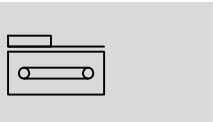

Size
70 … 120

Stroke length
50 … 8500 mm

www.festo.com

General technical data				
Size		70	80	120
Design		Electromechanical axis with toothed belt		
Guide		Plain-bearing guide		
Mounting position		Any		
Working stroke	[mm]	50 … 8500	50 … 8500	50 … 8500
Max. feed force F_x	[N]	350	800	1300
Max. no-load torque[1]	[Nm]	0.5	1	3
Max. no-load resistance to shifting[1]	[N]	35	50	114
Max. driving torque	[Nm]	5	15.9	34.1
Max. speed	[m/s]	5		
Max. acceleration	[m/s²]	50		
Repetition accuracy	[mm]	±0.08		

1) At 0.2 m/s

Operating and environmental conditions		
Ambient temperature[1]	[°C]	–10 … +60
Degree of protection		
ELGA-…		IP40
ELGA-…-P0		IP00
Duty cycle	[%]	100

1) Note operating range of proximity sensors

Weight [kg]			
Size	70	80	120
Basic weight with 0 mm stroke[1]	2.16	4	11.8
Additional weight per 1000 mm stroke	2.64	3.56	7.45
Moving load	0.57	1.1	3.06

1) Incl. slide

Toothed belt				
Size		70	80	120
Pitch	[mm]	3	5	5
Expansion[1]	[%]	0.21	0.17	0.21
Effective diameter	[mm]	28.65	39.79	52.52
Feed constant	[mm/rev]	90	125	165

1) At max. feed force

Mass moment of inertia				
Size		70	80	120
J_O	[kg mm²]	175	666	3201
J_H per metre stroke	[kg mm²/m]	19	93	215
J_L per kg payload	[kg mm²/kg]	205	396	690

The mass moment of inertia J_A of the entire axis is calculated as follows:

$$J_A = J_O + J_H \times \text{working stroke [m]} + J_L \times m_{payload} \text{ [kg]}$$

Materials

Sectional view

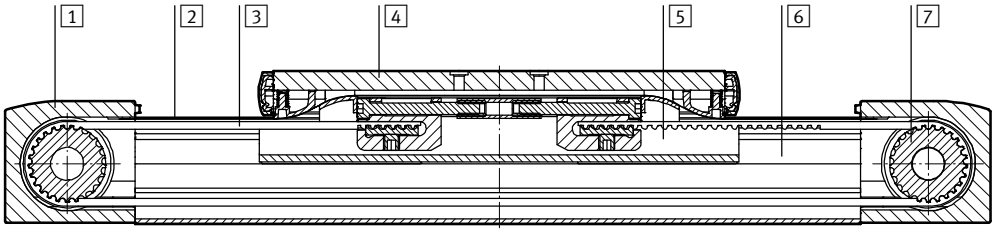

Axis		
1	Drive cover	Anodised wrought aluminium alloy
2	Cover strip	Stainless steel
3	Toothed belt	Polychloroprene with glass cord and nylon coating
4	Slide	Anodised wrought aluminium alloy
5	Slide elements	Polyacetal
6	Profile with integrated guide	Anodised wrought aluminium alloy
7	Toothed belt pulley	High-alloy stainless steel
	Note on materials	RoHS-compliant
		Contains paint-wetting impairment substances

Characteristic load values

The indicated forces and torques refer to the slide surface. The point of application of force is the point where the centre of the guide and the longitudinal centre of the slide intersect. These values must not be exceeded during dynamic operation. Special attention must be paid to the cushioning phase.

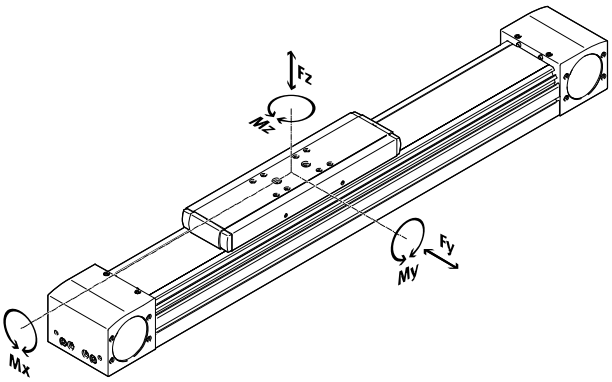

If the axis is subjected to two or more of the indicated forces and torques simultaneously, the following equation must be satisfied in addition to the indicated maximum loads:

Calculating the load comparison factor:

$$\frac{|F_{y,dyn}|}{F_{y,max}} + \frac{|F_{z,dyn}|}{F_{z,max}} + \frac{|M_{x,dyn}|}{M_{x,max}} + \frac{|M_{y,dyn}|}{M_{y,max}} + \frac{|M_{z,dyn}|}{M_{z,max}} \leqq 1$$

Permissible forces and torques				
Size		70	80	120
$Fy_{max.}$	[N]	80	200	380
Fz_{max}	[N]	400	800	1600
$Mx_{max.}$	[Nm]	5	10	20
$My_{max.}$	[Nm]	30	60	120
$Mz_{max.}$	[Nm]	10	20	40

Note

The plain-bearing guide is not backlash-free. The toothed belt axis ELGA-TB-RF is recommended for applications that need to be backlash-free, or applications involving high torque loads.

PositioningDrives engineering software www.festo.com

Max. acceleration a as a function of payload m

Size 70

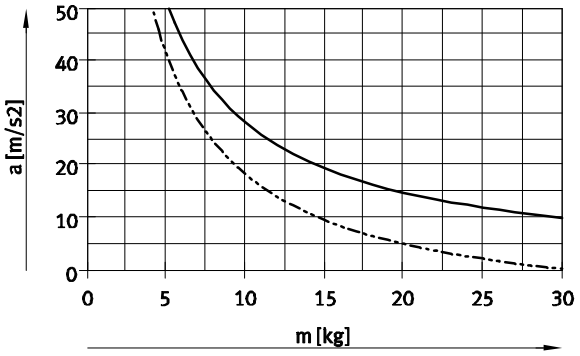

Size 80

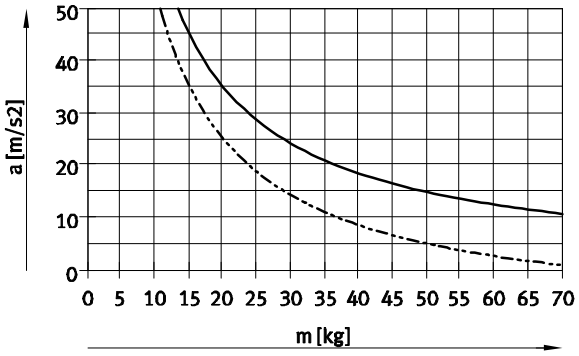

Size 120

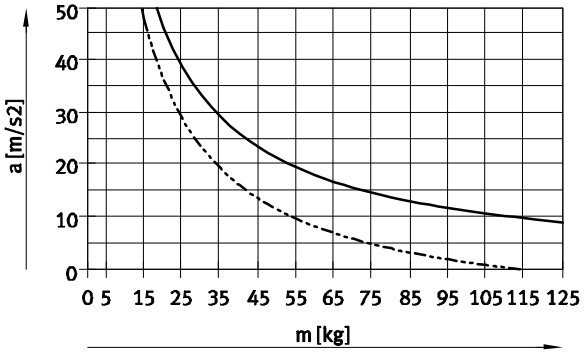

Horizontal
Vertical

Speed v as a function of rotational speed n

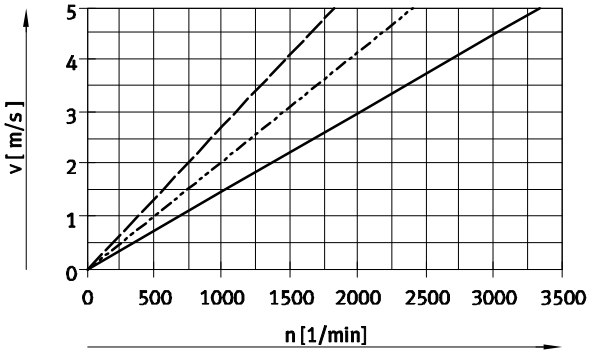

ELGA-TB-G-70
ELGA-TB-G-80
ELGA-TB-G-120

Theoretical feed force F as a function of input torque M

Size 70

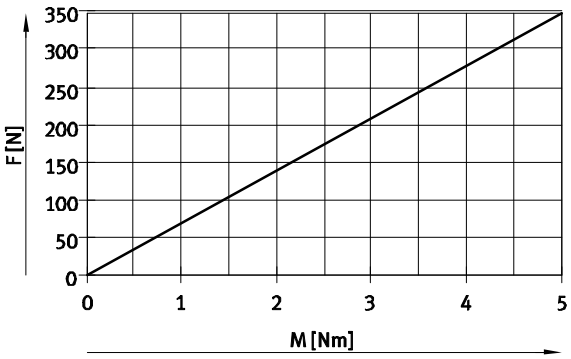

ELGA-TB-G-70

Size 80/120

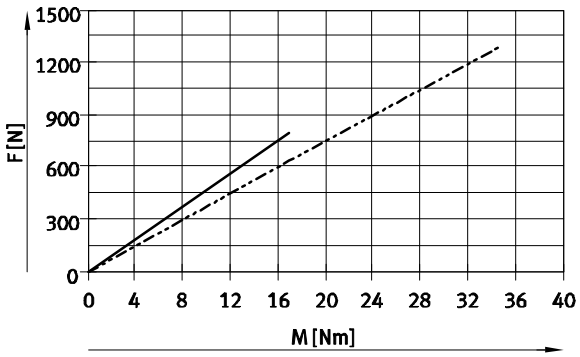

ELGA-TB-G-80
ELGA-TB-G-120

Stroke reserve

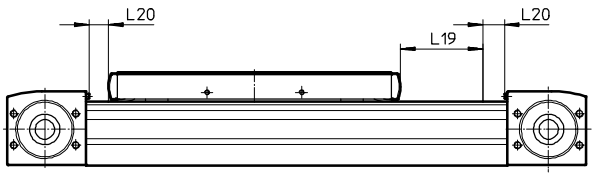

L19 = Nominal stroke
L20 = Stroke reserve

- The stroke reserve is a safety distance which is generally not used as work space
- The sum of the nominal stroke and 2x stroke reserve must not exceed the maximum working stroke
- The stroke reserve length can be freely selected
- The stroke reserve is defined via the "stroke reserve" characteristic in the modular product system.

Example:
Type ELGA-TB-G-70-500-20H-...

Nominal stroke	= 500 mm
2x stroke reserve	= 40 mm
Working stroke	= 540 mm
(540 mm =	500 mm + 2x 20 mm)

The toothed belt axis ELGA-TB-G features a safety distance to the end positions as standard.

Size		70	80	120
Safety distance per end position	[mm]	4.5	5	5

Second moment of area

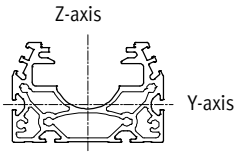

Size		70	80	120
Iy	[mm^4]	1.47×10^5	2.77×10^5	1.23×10^6
Iz	[mm^4]	4.25×10^5	9.07×10^5	4.03×10^6

Maximum permissible support span L (without profile mounting MUE/central support EAHF) as a function of force F

In order to limit deflection in the case of large strokes, the axis may need to be supported.
The following graphs can be used to determine the maximum permissible support span l as a function of force F acting on the axis. The deflection is f = 0.5 mm.

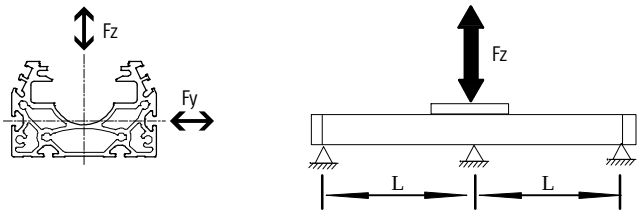

Force Fy

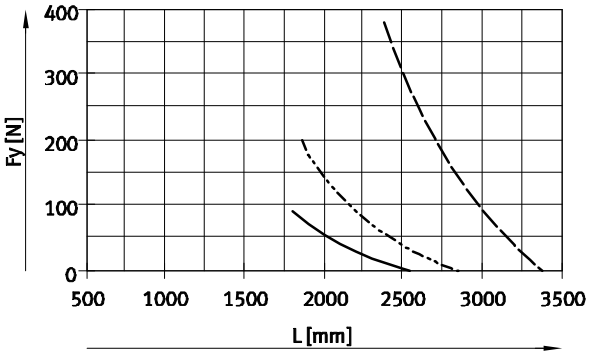

Force Fz

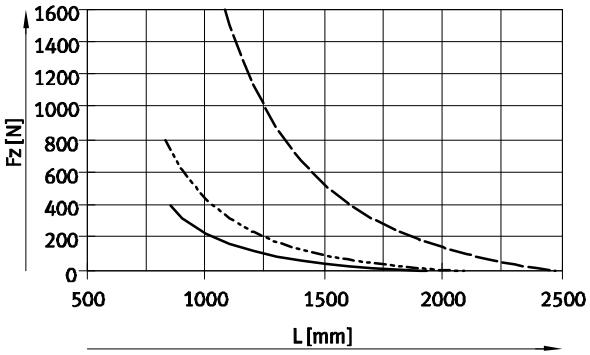

ELGA-TB-G-70
ELGA-TB-G-80
ELGA-TB-G-120

Recommended deflection limits

Adherence to the following deflection limits is recommended so as not to impair the functional performance of the axes. Greater deformation can result in increased friction, greater wear and reduced service life.

Size	Dyn. deflection (moving load)	Stat. deflection (stationary load)
70 … 120	0.05% of the axis length, max. 0.5 mm	0.1% of the axis length

Toothed belt axes ELGA-TB-G, with plain-bearing guide

Technical data

Dimensions Download CAD data ➔ **www.festo.com**

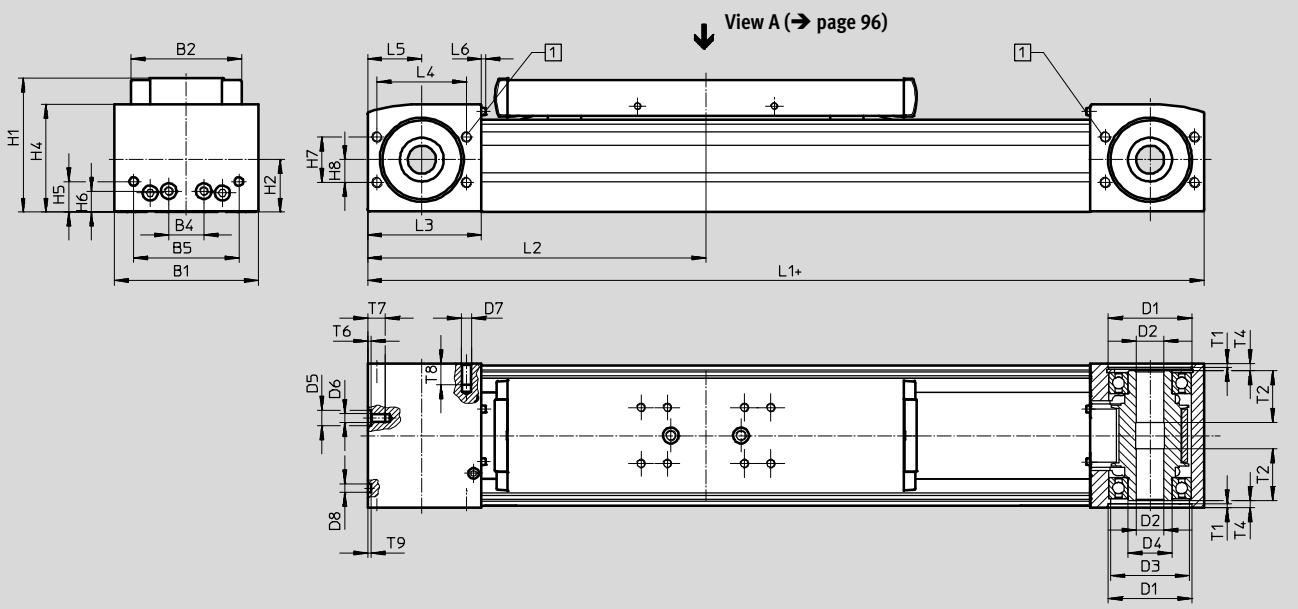

\+ = plus stroke length + 2 x stroke reserve

1 Sealing air connections

Size	B1	B2	B4	B5	D1 ∅ H7	D2 ∅ H7	D3 ∅	D4 ∅	D5 ∅ H7	D6	D7
70	69	48.2	30	45	38	16	34	25	–	M5	M6
80	82	63.2	20	60	48	16	45	25	9	M5	M6
120	120	95	80	40	80	23	72	45	–	M8	M8

Size	D8 ∅ H7	H1	H2	H4	H5	H6	H7	H8	L1	L2 Min.	L3
70	5	64	26.5	50.8	13	13	24	12	346	173	57.5
80	5	76.5	30	61.5	17.5	12	26	13	386	193	65
120	9	111.5	45	91	22	22	59	32	546	273	100

Size	L4	L5	L6	T1	T2	T4	T6	T7	T8	T9
70	42	27.5	2.3	2.1	18	7.15	–	10	12	3.1
80	51	31	2.3	2.1	29.5	4	2.1	10	12	2
120	76	50	2.5	3.1	29.5	4	–	16	16	2.1

Dimensions Download CAD data ➔ **www.festo.com**

Profile

Size 70

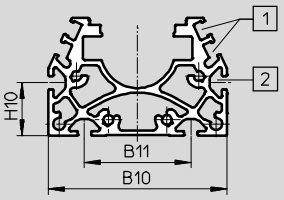

Size 80

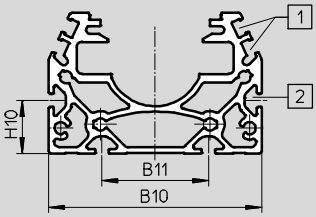

Size 120

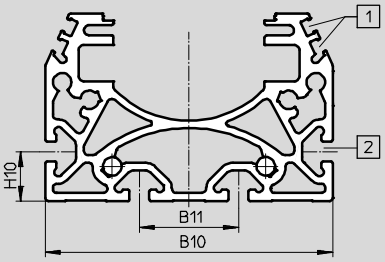

1 Sensor slot for proximity sensor
2 Mounting slot for slot nut:
for size 70, 80: slot nut NST-5-M5
for size 120: slot nut NST-8-M6

Size	B10	B11	H10
70	67	40	20
80	80	40	20
120	116	40	20

Note

Requirements for the flatness of the bearing surface and of attachments as well as for use in parallel structures ➔ www.festo.com/sp User Documentation

Dimensions Download CAD data ➔ **www.festo.com**

Slide

Size 70

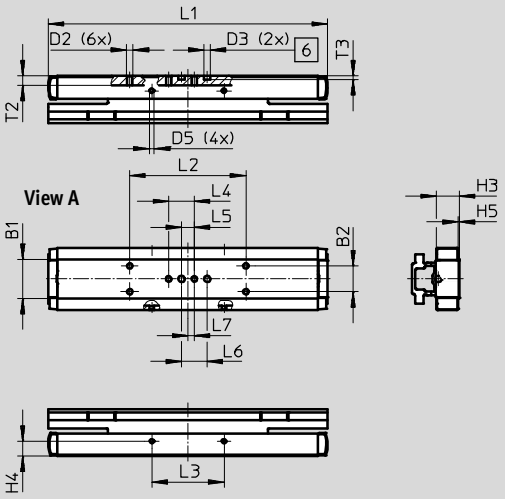

Size 80

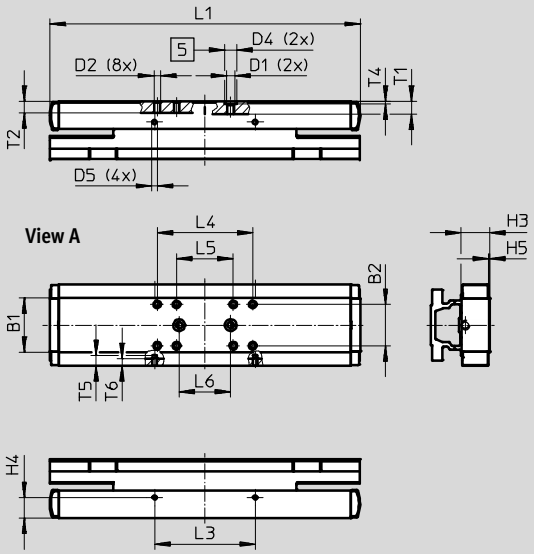

Size 120

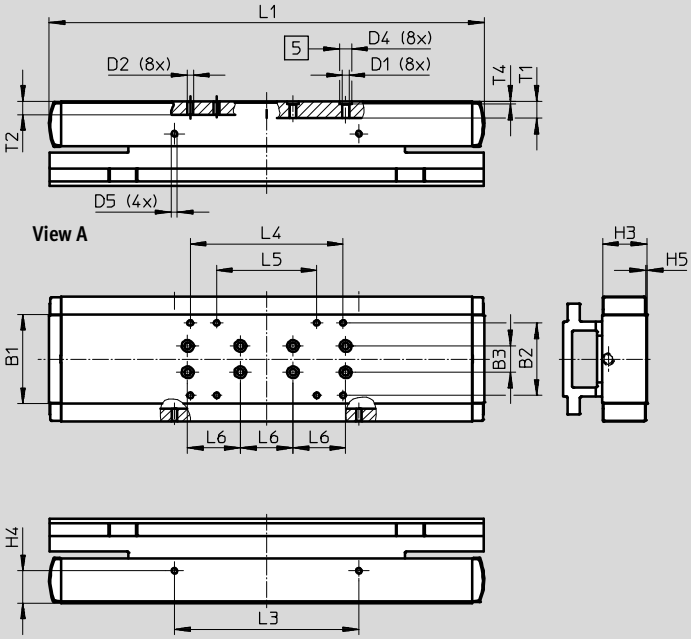

5 Hole for centring sleeve
6 Hole for centring pin

Toothed belt axes ELGA-TB-G, with plain-bearing guide

Technical data

Size	B1	B2	B3	D1	D2	D3 ∅	D4 ∅	D5
70	30	20±0.1	–	–	M5	5^{H7}	–	M4
80	42	32±0.2	–	M6	M5	–	9^{H7}	M4
120	68	55±0.2	20±0.03	M6	M5	–	9^{H7}	M5

Size	H3	H4 ±0.1	H5	L1	L2 ±0.1	L3 ±0.1	L4	L5
70	17.7	11.7	1	216.6	90	56	20±0.1	10±0.1
80	22.2	16	1	240.6	–	78	74±0.2	44±0.2
120	33.8	24.5	1	330.4	–	140	116±0.2	76±0.2

Size	L6 ±0.03	L7	T1	T2	T3 +0.1	T4 +0.1	T5	T6
70	20	5	–	7.5	3.1	–	–	–
80	40	–	9.7	9	–	2.1	8	6
120	40	–	12.8	10	–	2.1	–	–

Accessories

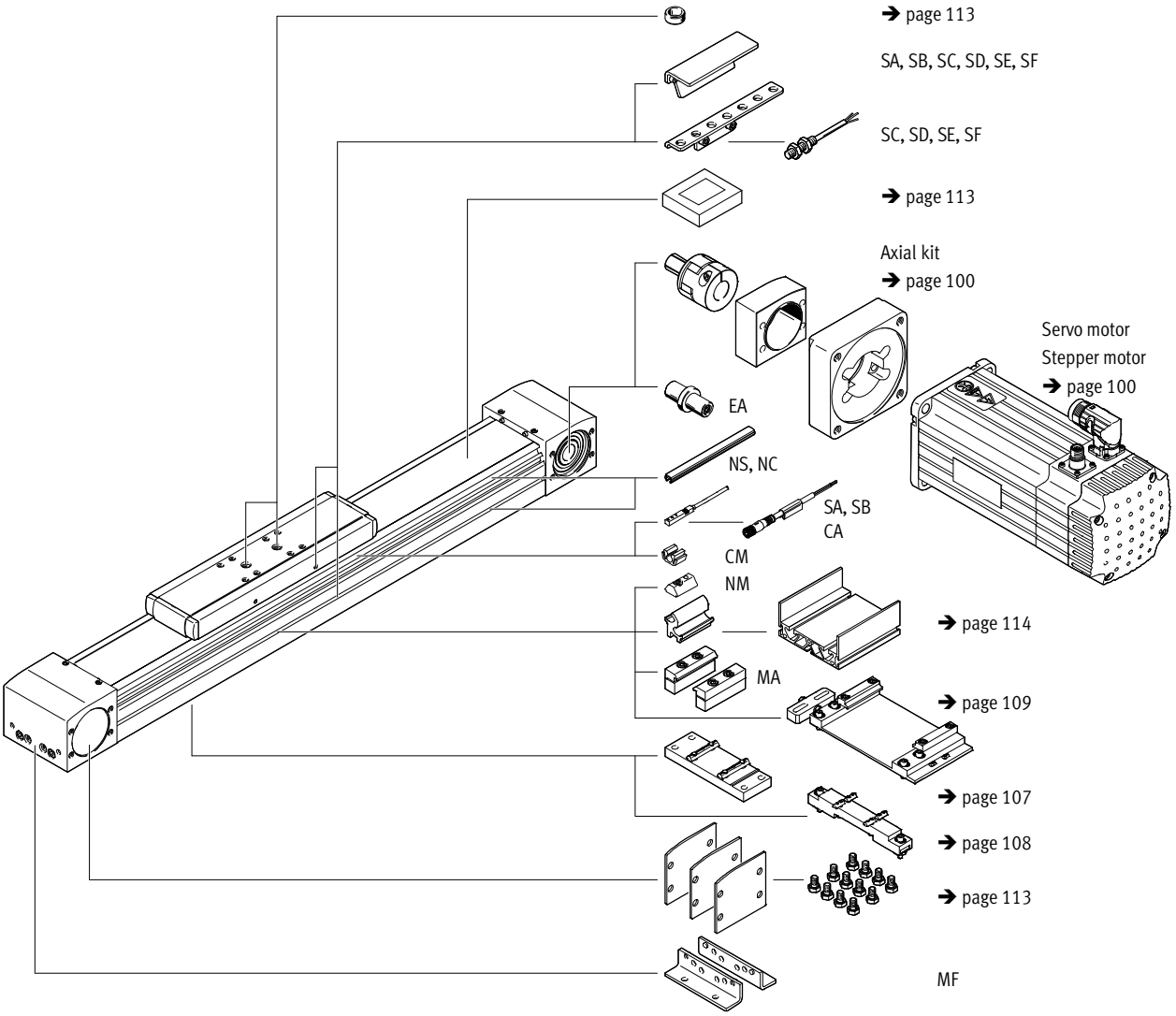

Toothed belt axes ELGA-TB-G, with plain-bearing guide

Ordering data – Modular products

FESTO

Ordering table								
Size		70	80	120	Condi-tions	Code		Entry code
M	Module no.	**570502**	**570503**	**570504**				
	Design	Linear axis				**ELGA**		ELGA
	Function	Toothed belt				☆ **-TB**		-TB
	Guide	Plain-bearing guide				☆ **-G**		-G
	Size [mm]	70	80	120		☆ **-...**		
	Stroke length [mm]	1 ... 8500				☆ **-...**		
	Stroke reserve [mm]	0 ... 999 (0 = no stroke reserve)			1	☆ **-...H**		
O	Protection against particles	Standard				☆		
		Without strip cover				☆ **-P0**		
O	Accessories	Accessories enclosed separately				**+**		+
	Foot mounting	1				**MF**		
	Profile mounting	1 ... 50				**...MA**		
	Proximity sensor (SIES), inductive, slot type 8, PNP, incl. switch lug – N/O contact, 7.5 m cable	1 ... 6				**...SA**		
	Proximity sensor (SIES), inductive, slot type 8, PNP, incl. switch lug – N/C contact, 7.5 m cable	1 ... 6				**...SB**		
	Proximity sensor (SIEN), inductive, M8, PNP, incl. switch lug with sensor bracket – N/O contact, 2.5 m cable	1 ... 99				**...SC**		
	Proximity sensor (SIEN), inductive, M8, PNP, incl. switch lug with sensor bracket – N/C contact, 2.5 m cable	1 ... 99				**...SD**		
	Proximity sensor (SIEN), inductive, M8, PNP, incl. switch lug with sensor bracket – N/O contact, plug connector M8	1 ... 99				**...SE**		
	Proximity sensor (SIEN), inductive, M8, PNP, incl. switch lug with sensor bracket – N/C contact, plug connector M8	1 ... 99				**...SF**		
	Connecting cable 2.5 m, M8, 3-wire	1 ... 99				**...CA**		
	Sensor slot cover	1 ... 50 (1 = 2 units, 500 mm length)				**...NS**		
	Mounting slot cover	1 ... 50 (1 = 2 units, 500 mm length)				**...NC**		
	Slot nut for mounting slot	1 ... 99				**...NM**		
	Clip for sensor slot	10, 20, 30, 40, 50, 60, 70, 80, 90				**...CM**		
	Drive shaft	1 ... 4				**...EA**		
	Operating instructions	With operating instructions						
		Without operating instructions				**-DN**		

1 ... **H** The sum of the nominal stroke and 2x stroke reserve must be at least 50 mm and must not exceed the maximum stroke length

The code SA, SB includes a switch lug in the scope of delivery.

The code SC, SD, SE, SF includes one switch lug and max. two sensor brackets in the scope of delivery.

M Mandatory data
O Options

Transfer order code

	ELGA	–	TB	–	G	–		–		–		+		–	

Note

Depending on the combination of motor and drive, it may not be possible to reach the maximum feed force of the drive.

Permissible axis/motor combinations with axial kit – Without gear unit			Technical data ➔ Internet: eamm-a
Motor[1]	Axial kit		
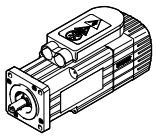	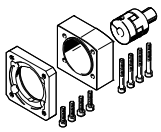		
Type	Part No.	Type	
ELGA-TB-...-70			
With servo motor			
EMMS-AS-70-...	**1202331**	**EAMM-A-N38-70A**	
With stepper motor			
EMMS-ST-87-...	☆ **3324111**	**EAMM-A-N38-87A**	
ELGA-TB-...-80			
With servo motor			
EMME-AS-100-...	**1201894**	**EAMM-A-N48-100A**	
EMMS-AS-100-...	**1201894**	**EAMM-A-N48-100A**	
ELGA-TB-...-120			
With servo motor			
EMMS-AS-140-...	**1201691**	**EAMM-A-N80-140A**	
ELGA-TB-...-150			
With servo motor			
EMMS-AS-140-...	**3657226**	**EAMM-A-L95-140A-G2**	
EMMS-AS-190-...	**3659562**	**EAMM-A-L95-190A-G2**	

1) The input torque must not exceed the maximum permissible transferable torque of the axial kit.

Festo core product range	★ Ready for dispatch from the Festo factory in 24 hours ☆ Ready for dispatch in 5 days maximum from stock

Component parts of the axial kit – Without gear unit				
Axial kit	Comprises:			
	Motor flange	Coupling	Coupling housing	Screw set
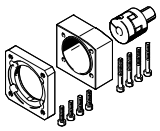	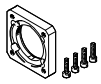	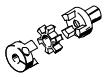		
Part No. Type	Part No. Type	Part No. Type	Part No. Type	
ELGA-TB-...-70				
1202331 **EAMM-A-N38-70A**	**1202337** **EAMF-A-38D-70A**	**558001** **EAMD-32-32-11-16X20**	**1345947** **EAMK-A-N38-38D**	**1202288** **EAHM-L5-M6-35**
☆ **3324111** **EAMM-A-N38-87A**	**3319868** **EAMF-A-38D-87A**	**558001** **EAMD-32-32-11-16X20**	**1345947** **EAMK-A-N38-38D**	**1202288** **EAHM-L5-M6-35**
ELGA-TB-...-80				
1201894 **EAMM-A-N48-100A**	**1201924** **EAMF-A-48C-100A**	**558002** **EAMD-42-40-19-16X25**	**1345949** **EAMK-A-N48-48C**	**1201874** **EAHM-L5-M6-50**
ELGA-TB-...-120				
1201691 **EAMM-A-N80-140A**	**1190796** **EAMF-A-80A-140A**	**558005** **EAMD-56-46-24-23X27**	**1345953** **EAMK-A-N80-80A**	**1201751** **EAHM-L5-M8-75**
ELGA-TB-...-150				
3657226 **EAMM-A-L95-140A-G2**	**558023** **EAMF-A-95A-140A**	**558008** **EAMD-67-51-24-32X32-U**	**3712650** **EAMK-A-L95-95A/B-G2**	**567497** **EAHM-L2-M8-80**
3659562 **EAMM-A-L95-190A-G2**	**1378473** **EAMF-A-95A-190A**	**1379269** **EAMD-67-51-32-32X32-U**	**3712650** **EAMK-A-L95-95A/B-G2**	**567497** **EAHM-L2-M8-80**

Note

For the optimum selection of axis/motor combinations ➔ PositioningDrives engineering software www.festo.com

Permissible axis/motor combinations with axial kit – With gear unit			Technical data ➔ Internet: eamm-a
Motor[1)]	Gear units	Axial kit	
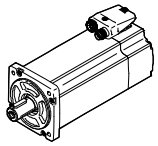	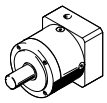	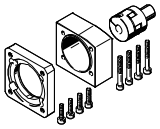	
Type	Type	Part No.	Type
ELGA-TB-...-70			
With servo motor			
EMMS-AS-55-...	**EMGA-60-P-G...-SAS-55**	☆ **1202253**	**EAMM-A-N38-60G**
EMME-AS-60-...	**EMGA-60-P-G...-EAS-60**	**1456616**	**EAMM-A-N38-60H**
EMMS-AS-70-...	**EMGA-60-P-G...-SAS-70**	☆ **1202253**	**EAMM-A-N38-60G**
With stepper motor			
EMMS-ST-57-...	**EMGA-60-P-G...-SST-57**	☆ **1202253**	**EAMM-A-N38-60G**
With integrated drive			
EMCA-EC-67-...	**EMGC-60-...**	**1456616**	**EAMM-A-N38-60H**
ELGA-TB-...-80			
With servo motor			
EMMS-AS-55-...	**EMGA-60-P-G...-SAS-55**	☆ **1972527**	**EAMM-A-N48-60G**
EMME-AS-60-...	**EMGA-60-P-G...-EAS-60**	**1456618**	**EAMM-A-N48-60H**
EMMS-AS-70-...	**EMGA-60-P-G...-SAS-70**	☆ **1972527**	**EAMM-A-N48-60G**
EMMS-AS-70-...	**EMGA-80-P-G...-SAS-70**	☆ **1258793**	**EAMM-A-N48-80G**
EMME-AS-80-...	**EMGA-80-P-G...-EAS-80**	☆ **1258793**	**EAMM-A-N48-80G**
EMME-AS-100-...	**EMGA-80-P-G...-SAS-100**	☆ **1258793**	**EAMM-A-N48-80G**
EMMS-AS-100-...	**EMGA-80-P-G...-SAS-100**	☆ **1258793**	**EAMM-A-N48-80G**
With stepper motor			
EMMS-ST-57-...	**EMGA-60-P-G...-SST-57**	☆ **1972527**	**EAMM-A-N48-60G**
EMMS-ST-87-...	**EMGA-80-P-G...-SST-87**	☆ **1258793**	**EAMM-A-N48-80G**
With integrated drive			
EMCA-EC-67-...	**EMGC-60-...**	**1456618**	**EAMM-A-N48-60H**
ELGA-TB-...-120			
With servo motor			
EMMS-AS-70-...	**EMGA-80-P-G...-SAS-70**	☆ **2372096**	**EAMM-A-N80-80G**
EMME-AS-80-...	**EMGA-80-P-G...-EAS-80**	☆ **2372096**	**EAMM-A-N80-80G**
EMME-AS-100-...	**EMGA-80-P-G...-SAS-100**	☆ **2372096**	**EAMM-A-N80-80G**
EMMS-AS-100-...	**EMGA-80-P-G...-SAS-100**	☆ **2372096**	**EAMM-A-N80-80G**
EMME-AS-100-...	**EMGA-120-P-G...-SAS-100**	☆ **1201695**	**EAMM-A-N80-120G**
EMMS-AS-100-...	**EMGA-120-P-G...-SAS-100**	☆ **1201695**	**EAMM-A-N80-120G**
EMMS-AS-140-...	**EMGA-120-P-G...-SAS-140**	☆ **1201695**	**EAMM-A-N80-120G**
With stepper motor			
EMMS-ST-87-...	**EMGA-80-P-G...-SST-87**	☆ **2372096**	**EAMM-A-N80-80G**
ELGA-TB-...-150			
With servo motor			
EMMS-AS-70-...	**EMGA-80-P-G...-SAS-70**	**3660191**	**EAMM-A-L95-80G-G2**
EMME-AS-80-...	**EMGA-80-P-G...-EAS-80**	**3660191**	**EAMM-A-L95-80G-G2**
EMME-AS-100-...	**EMGA-80-P-G...-SAS-100**	**3660191**	**EAMM-A-L95-80G-G2**
EMMS-AS-100-...	**EMGA-80-P-G...-SAS-100**	**3660191**	**EAMM-A-L95-80G-G2**
EMME-AS-100-...	**EMGA-120-P-G...-SAS-100**	☆ **3659941**	**EAMM-A-L95-120G-G2**
EMMS-AS-100-...	**EMGA-120-P-G...-SAS-100**	☆ **3659941**	**EAMM-A-L95-120G-G2**
EMMS-AS-140-...	**EMGA-120-P-G...-SAS-140**	☆ **3659941**	**EAMM-A-L95-120G-G2**
With stepper motor			
EMMS-ST-87-...	**EMGA-80-P-G...-SST-87**	**3660191**	**EAMM-A-L95-80G-G2**

Festo core product range	★ Ready for dispatch from the Festo factory in 24 hours ☆ Ready for dispatch in 5 days maximum from stock

Component parts of the axial kit – With gear unit				
Axial kit	Comprises:			
	Motor flange	Coupling	Coupling housing	Screw set
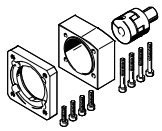	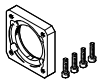	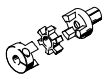		
Part No. Type	Part No. Type	Part No. Type	Part No. Type	
ELGA-TB-...-70				
☆ **1202253** **EAMM-A-N38-60G**	**1190015** **EAMF-A-38D-60G/H**	**558001** **EAMD-32-32-11-16X20**	**1345947** **EAMK-A-N38-38D**	**1202262** **EAHM-L5-M6-40**
1456616 **EAMM-A-N38-60H**	**1190015** **EAMF-A-38D-60G/H**	**1377840** **EAMD-32-32-14-16X20**	**1345947** **EAMK-A-N38-38D**	**1202262** **EAHM-L5-M6-40**
ELGA-TB-...-80				
☆ **1972527** **EAMM-A-N48-60G**	**1460111** **EAMF-A-48C-60G/H**	**558001** **EAMD-32-32-11-16X20**	**1345949** **EAMK-A-N48-48C**	**4984529** **EAHM-L5-M6-45**
1456618 **EAMM-A-N48-60H**	**1460111** **EAMF-A-48C-60G/H**	**1377840** **EAMD-32-32-14-16X20**	**1345949** **EAMK-A-N48-48C**	**4984529** **EAHM-L5-M6-45**
☆ **1258793** **EAMM-A-N48-80G**	**1190375** **EAMF-A-48C-80G**	**1781043** **EAMD-42-40-20-16X25-U**	**1345949** **EAMK-A-N48-48C**	**1201874** **EAHM-L5-M6-50**
ELGA-TB-...-120				
☆ **2372096** **EAMM-A-N80-80G**	**2372201** **EAMF-A-80A-80G**	**558004** **EAMD-56-46-20-23X27**	**1345953** **EAMK-A-N80-80A**	**1201712** **EAHM-L5-M8-60**
☆ **1201695** **EAMM-A-N80-120G**	**1190702** **EAMF-A-80A-120G**	**1188801** **EAMD-56-46-25-23X27**	**1345953** **EAMK-A-N80-80A**	**1201712** **EAHM-L5-M8-60**
ELGA-TB-...-150				
3660191 **EAMM-A-L95-80G-G2**	**3305700** **EAMF-A-95B-80G**	**3717812** **EAMD-67-51-20-32X32-U**	**3712650** **EAMK-A-L95-95A/B-G2**	**–**
☆ **3659941** **EAMM-A-L95-120G-G2**	**3659724** **EAMF-A-95A-120G-G2**	**558006** **EAMD-67-51-25-32X32-U**	**3712650** **EAMK-A-L95-95A/B-G2**	**567496** **EAHM-L2-M8-70**

Note

For the optimum selection of axis/motor combinations ➔ PositioningDrives engineering software www.festo.com

Festo core product range
★ Ready for dispatch from the Festo factory in 24 hours
☆ Ready for dispatch in 5 days maximum from stock

Drive shaft EAMB
Alternative interface
For ELGA-TB-KF/-KF-F1
For ELGA-TB-RF/-RF-F1
For ELGA-TB-G
(order code EA)

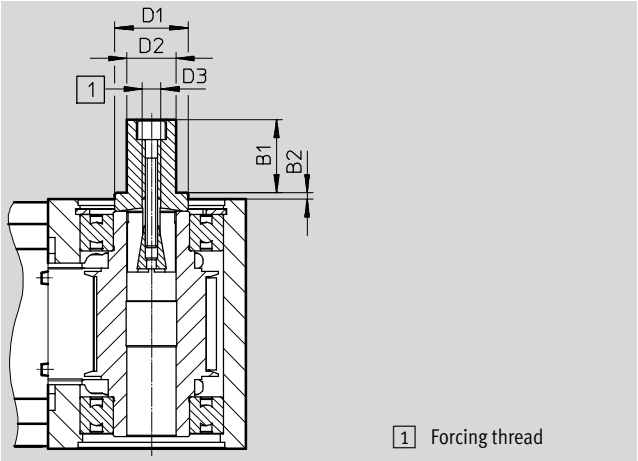

Dimensions and ordering data

For size	B1	B2	D1 ∅	D2 ∅	D3	Weight [g]	Part No.	Type
70	21	1.85	24	15	M6	70	**1344642**	**EAMB-24-9-15X21-16X20**
80	21	2	24	15	M6	70	**558036**	**EAMB-24-6-15X21-16X20**
120	26	2	34	25	M10	201	**558037**	**EAMB-34-6-25X26-23X27**
150	30	3	44	35	M12	463	**558038**	**EAMB-44-7-35X30-32X32**

Foot mounting HPE
For ELGA-TB-KF/-KF-F1
For ELGA-TB-RF/-RF-F1
For ELGA-TB-G
(order code MF)

Materials:
Galvanised steel
RoHS-compliant

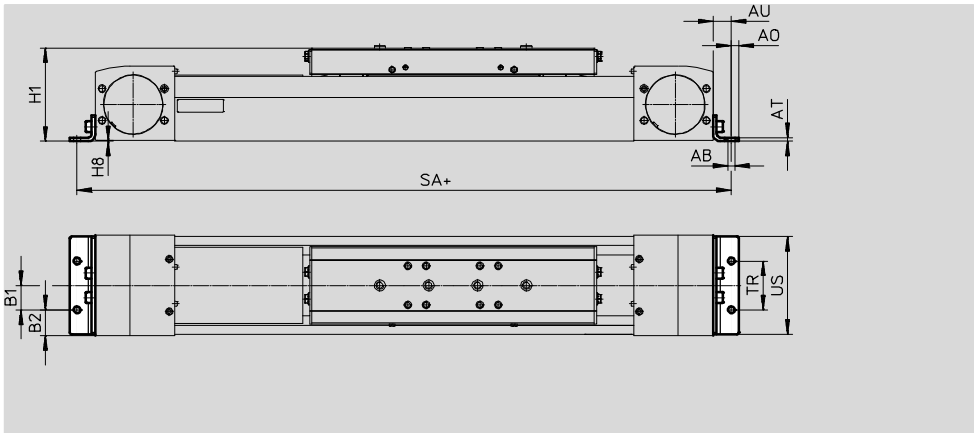

\+ = plus stroke length + 2 x stroke reserve

Dimensions and ordering data

For size	AB ∅	A0	AT	AU	B1	B2	H1	H8
70	5.5	6	3	13	20	14.5	64	0.5
80	5.5	6	3	13	20	21	76.5	0.5
120	9	8	6	22	40	20	111.5	0.5
150	9	12	8	25	40	35	141.5	1

For size	SA					TR	US
	ELGA-TB-KF	ELGA-TB-RF	ELGA-TB-RF-S	ELGA-TB-RF-L	ELGA-TB-G		
70	372	446	368	546	372	40	67
80	416	610	526	750	416	40	80
120	590	819	717	1049	590	80	116
150	762	–	–	–	–	80	150

For size	Weight [g]	Part No.	Type
70	115	**558321**	**HPE-70**
80	150	**558322**	**HPE-80**
120	578	**558323**	**HPE-120**
150	1181	**3002636**	**HPE-150**

Profile mounting MUE
For ELGA-TB-KF
For ELGA-TB-RF
For ELGA-TB-G
(order code MA)

Materials:
Anodised aluminium
RoHS-compliant

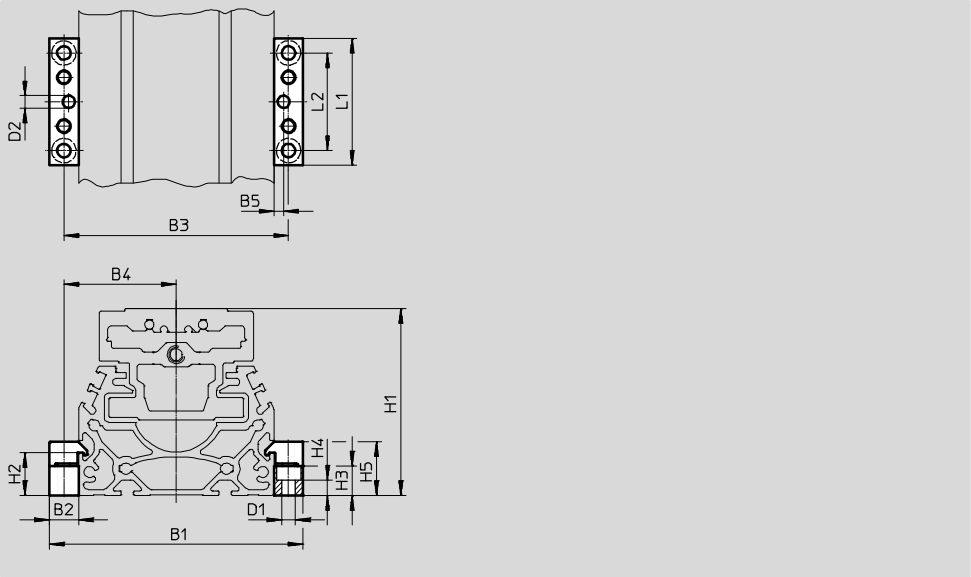

Dimensions and ordering data

For size	B1	B2	B3	B4	B5	D1 ∅	D2 ∅ H7	H1	H2
70	91	12	79	39.5	4	5.5	5	64	17.5
80	104	12	92	46	4	5.5	5	76.5	17.5
120	154	19	135	67.5	4	9	5	111.5	16
150	188	19	169	84.5	4	9	5	141.5	16

For size	H3	H4	H5	L1	L2	Weight [g]	Part No.	Type
70	12	6.2	22	52	40	80	☆ **558043**	**MUE-70/80**
80	12	6.2	22	52	40	80	☆ **558043**	**MUE-70/80**
120	14	5.5	29.5	90	40	290	☆ **558044**	**MUE-120/185**
150	14	5.5	29.5	90	40	290	☆ **558044**	**MUE-120/185**

Festo core product range
★ Ready for dispatch from the Festo factory in 24 hours
☆ Ready for dispatch in 5 days maximum from stock

Central support EAHF
For ELGA-TB-KF/-KF-F1
For ELGA-TB-RF/-RF-F1
For ELGA-TB-G

Material:
Anodised aluminium
RoHS-compliant

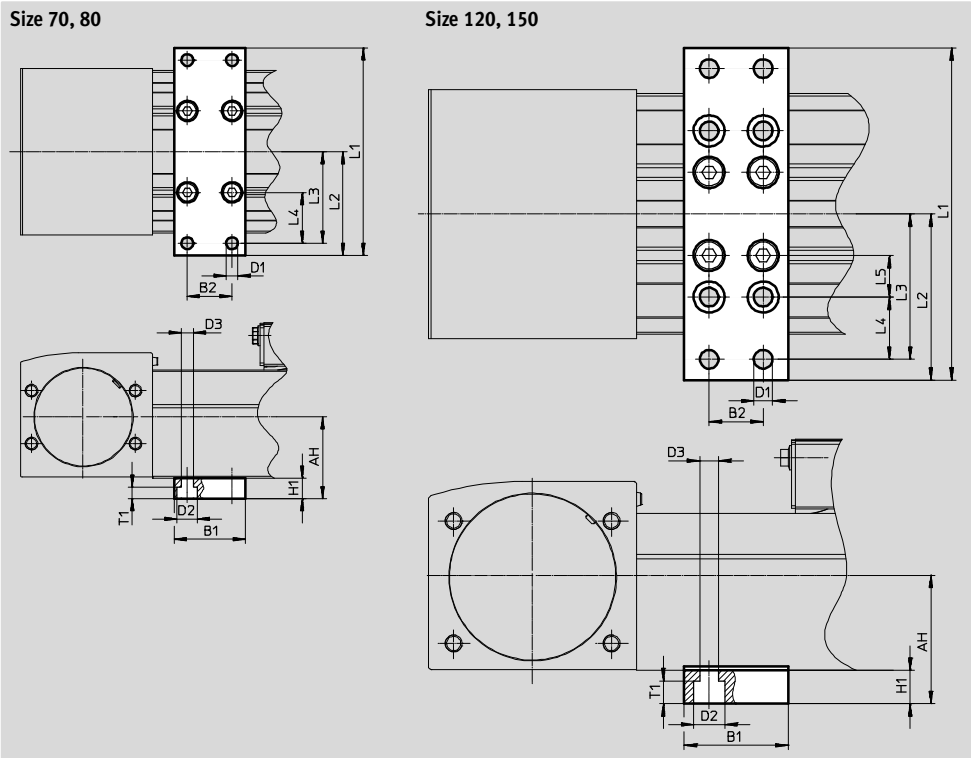

Dimensions and ordering data

For size	AH	B1	B2	D1 ∅	D2 ∅	D3 ∅	H1	L1
70	36.5	35	22	5.8	10	5.8	10	102
80	40							112
120	61	50	26	9	15	9	16	160
150	74.6							200

For size	L2	L3	L4	L5	T1	Weight [g]	Part No.	Type
70	51	45	25	–	5.7	113	**2349256**	**EAHF-L5-70-P**
80	56	50	30			123	**3535188**	**EAHF-L5-80-P**
120	80	70	30	20	11	384	**2410274**	**EAHF-L5-120-P**
150	100	90	50	–		495	**3535189**	**EAHF-L5-150-P**

Adjusting kit EADC-E15

Materials:
EADC-E15-80/120: Wrought aluminium alloy
EADC-E15-185: Steel
RoHS-compliant

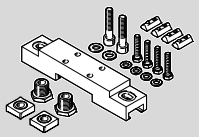

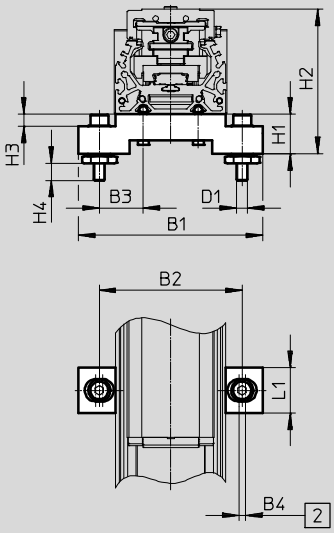

2 Width of hole

Dimensions and ordering data						
For size	B1	B2	B3	B4	D1	H1
70	134	104	32	5	M8	29
80	134	104	32	5	M8	29
120	170	140	50	5	M8	29
150	236	209	64.5	5	M8	29

For size	H2	H3	H4	L1	Weight [g]	Part No.	Type
70	93	9	12.6	33	386	**8047566**	**EADC-E15-80-E7**
80	105.5	9	12.6	33	386	**8047566**	**EADC-E15-80-E7**
120	140.5	9	12.6	33	388	**8047567**	**EADC-E15-120-E7**
150	170.5	9	12.6	33	569	**8047568**	**EADC-E15-185-E7**

Adjusting kit EADC-E16

Materials:
Wrought aluminium alloy
RoHS-compliant

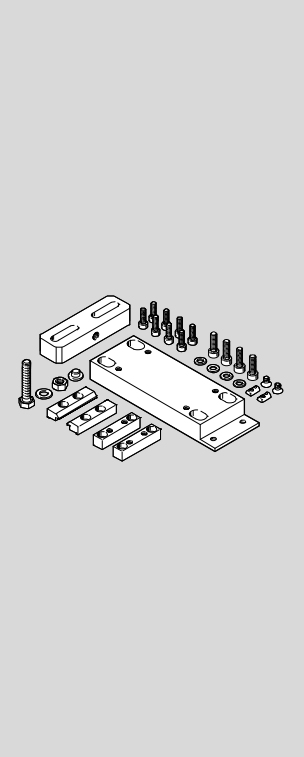

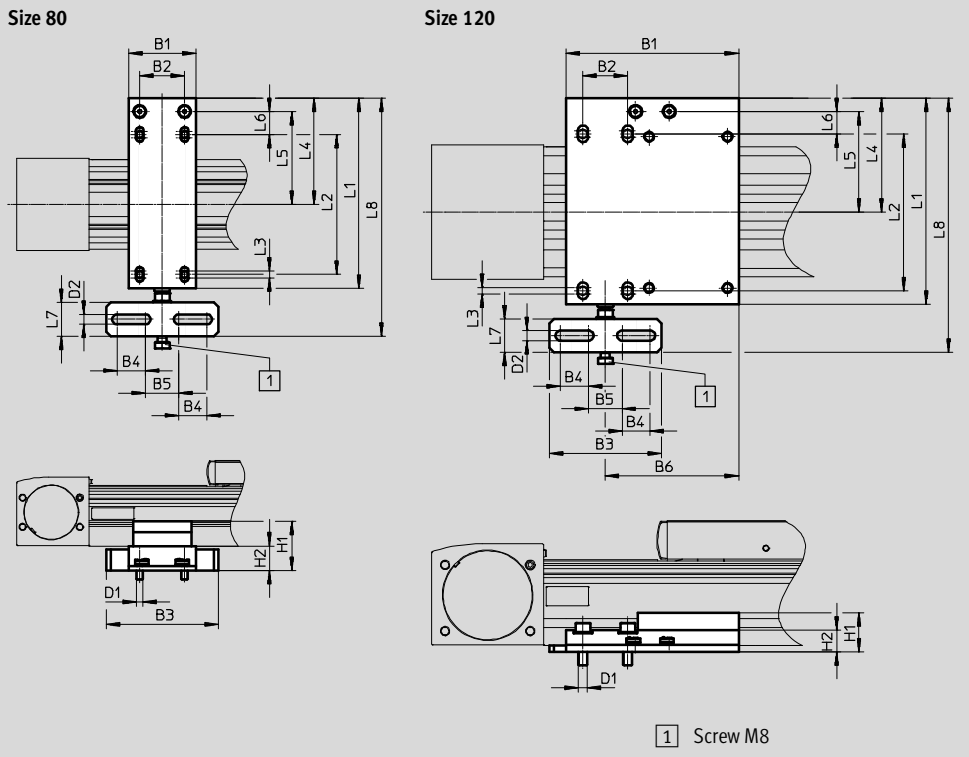

Dimensions and ordering data												
For size	B1	B2	B3	B4	B5	B6	D1	D2	H1	H2	L1	L2
80	60	40	100	25	30	–	M6	9	44	22	170	125
120	154	40	100	25	30	119	M8	9	35.1	19.6	184	140

	L3	L4	L5	L6	L7	L8	Weight [g]	Part-No.	Type
80	6	95	83	20.5	30	212.5	828	**8047577**	**EADC-E16-80-E7**
120	6	101.7	89.7	20	30	227	1134	**8047578**	**EADC-E16-120-E7**

Switch lug SF-EGC-1
For sensing via proximity sensor
SIES-8M
For ELGA-TB-KF
For ELGA-TB-RF
For ELGA-TB-G
(order code SA or SB)

Materials:
Galvanised steel
RoHS-compliant

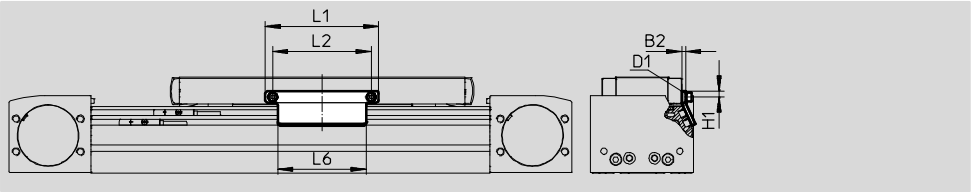

Dimensions and ordering data									
For size	B2	D1	H1	L1	L2	L6	Weight [g]	Part No.	Type
70	3	M4	4.65	70	56	50	50	☆ **558047**	**SF-EGC-1-70**
80	3	M4	4.65	90	78	70	63	☆ **558048**	**SF-EGC-1-80**
120	3	M5	8	170	140	170	147	☆ **558049**	**SF-EGC-1-120**
150	3	M5	10	230	200	230	246	☆ **558051**	**SF-EGC-1-185**

Festo core product range
★ Ready for dispatch from the Festo factory in 24 hours
☆ Ready for dispatch in 5 days maximum from stock

Switch lug SF-EGC-2
For sensing with proximity sensor SIEN-M8B (order code SC, SD, SE or SF) or SIES-8M
For ELGA-TB-KF
For ELGA-TB-RF
For ELGA-TB-G

Material:
Galvanised steel
RoHS-compliant

Sensor bracket HWS-EGC
For proximity sensor SIEN-M8B (order code SC, SD, SE or SF)

Materials:
Galvanised steel
RoHS-compliant

Switch lug SF-EGC-2

Sensor bracket HWS-EGC

For size 70, 80, 120

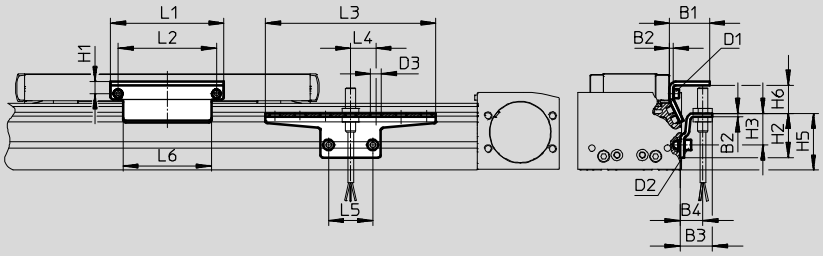

For size 150

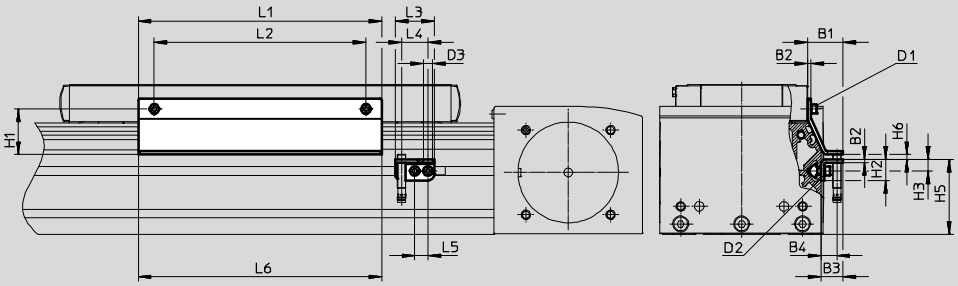

Dimensions and ordering data

For size	B1	B2	B3	B4	D1	D2	D3 ∅	H1	H2
70	31.5	3	25.5	18	M4	M5	8.4	9.5	35
80	31.5	3	25.5	18	M4	M5	8.4	9.5	35
120	32	3	25.5	18	M5	M5	8.4	13.2	65
150	33	3	21	15	M5	M5	8.4	43	20

For size	H3	H5	H6 Max.	L1	L2	L3	L4	L5	L6
70	25	45	13.5	70	56	135	20	35	50
80	25	45	23.5	90	78	135	20	35	70
120	55	75	24	170	140	215	20	35	170
150	11	71	4.5	230	200	37	25	12.5	230

For size	Weight [g]	Part No.	Type
	Switch lug		
70	100	**558052**	**SF-EGC-2-70**
80	130	**558053**	**SF-EGC-2-80**
120	277	**558054**	**SF-EGC-2-120**
150	390	**558056**	**SF-EGC-2-185**

For size	Weight [g]	Part No.	Type
	Sensor bracket		
70	110	**558057**	**HWS-EGC-M5**
80	110	**558057**	**HWS-EGC-M5**
120	217	**570365**	**HWS-EGC-M8-B**
150	58	**560517**	**HWS-EGC-M8KURZ**

Note

The proximity sensors SIEN-M8B cannot be mounted in the area of the profile mounting MUE.

Switch lug EAPM
For sensing via proximity sensor
SME-8M
For ELGA-TB-KF-F1
For ELGA-TB-RF-F1

Materials:
Wrought aluminium alloy
RoHS-compliant

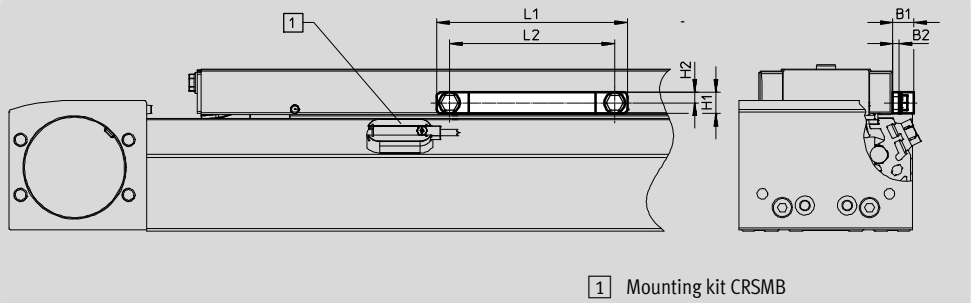

1 Mounting kit CRSMB

Dimensions and ordering data

For size	B1	B2	H1	H2	L1	L2	Weight [g]	Part No.	Type
70	10	3	10	5	70	56	46	**2417032**	**EAPM-L5-70-SLM**
80	10	3	10	5	90	78	66	**2671318**	**EAPM-L5-80-SLM**
120	10	3	16	8	170	140	146	**2671326**	**EAPM-L5-120-SLM**

Ordering data

	For size	Description	Part No.	Type
Mounting kit CRSMB				
	70 … 120	• For proximity sensor SME-8M • For ELGA-TB-KF-F1 • For ELGA-TB-RF-F1	**525565**	**CRSMB-8-32**

Ordering data						
	For size	Description	Order code	Part No.	Type	PU[1]
Slot nut NST						
	70, 80	• For mounting slot • For ELGA-TB-KF/-KF-F1 • For ELGA-TB-RF/-RF-F1 • For ELGA-TB-G	NM	**150914**	**NST-5-M5**	1
			–	**8047843**	**NST-5-M5-10**	10
				8047878	**NST-5-M5-50**	50
	120, 150		NM	**150915**	**NST-8-M6**	1
			–	**8047868**	**NST-8-M6-10**	10
				8047869	**NST-8-M6-50**	50
Centring pin ZBS/centring sleeve ZBH[2]						
	For ELGA-TB-KF/-KF-F1					
	70	For slide	–	**150928**	**ZBS-5**	10
	70, 80, 120, 150			**150927**	**ZBH-9**	
	For ELGA-TB-RF/-RF-F1					
	70, 80, 120	For slide	–	**150927**	**ZBH-9**	10
	For ELGA-TB-G					
	70	For slide	–	**150928**	**ZBS-5**	10
	80, 120			**150927**	**ZBH-9**	
Slot cover ABP						
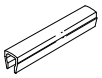	70, 80	• For mounting slot • Every 0.5 m • For ELGA-TB-KF/-KF-F1 • For ELGA-TB-RF/-RF-F1 • For ELGA-TB-G	NC	**151681**	**ABP-5**	2
	120, 150			**151682**	**ABP-8**	
Slot cover ABP-S						
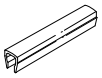	70 … 150	• For sensor slot • Every 0.5 m • For ELGA-TB-KF • For ELGA-TB-RF • For ELGA-TB-G	NS	**563360**	**ABP-5-S1**	2
Clip SMBK						
	70 … 150	• For sensor slot, for attaching the proximity sensor cables • For ELGA-TB-KF • For ELGA-TB-RF • For ELGA-TB-G	CM	**534254**	**SMBK-8**	10
Clamping component EADT						
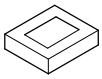	70, 80	Tool for retensioning the cover strip	–	**8058451**	**EADT-S-L5-70**	1
	120, 150			**8058450**	**EADT-S-L5-120**	
Cover kit EASC						
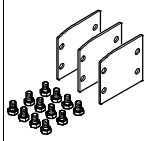	70	For covering the sides of the drive cover	–	**8049255**	**EASC-L5-70**	3
	80			**8049254**	**EASC-L5-80**	
	120			**8049253**	**EASC-L5-120**	
	150			**8049244**	**EASC-L5-150**	

1) Packaging unit
2) 2 centring pins/sleeves included in the scope of delivery of the axis

Mounting options between axis and support profile

Depending on the adapter kit, the spacing between the axis and the support profile is:
x = 20 mm or 50 mm

The support profile must be mounted using at least 2 adapter kits. For longer strokes, an adapter kit must be used every 500 mm.

Example:

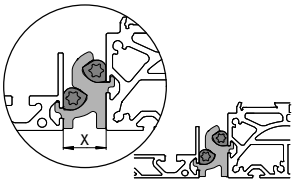

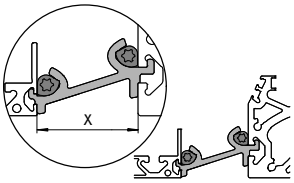

Ordering data

	For size	Description	Part No.	Type	PU[1]
Adapter kit DHAM					
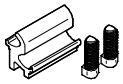	80	• For mounting the support profile on the axis • Spacing between axis and profile is 20 mm • For ELGA-TB-KF • For ELGA-TB-RF • For ELGA-TB-G	**562241**	**DHAM-ME-N1-CL**	1
	120, 150		**562242**	**DHAM-ME-N2-CL**	
	70, 80	• For mounting the support profile on the axis • Spacing between axis and profile is 50 mm • For ELGA-TB-KF • For ELGA-TB-RF • For ELGA-TB-G	**574560**	**DHAM-ME-N1-50-CL**	
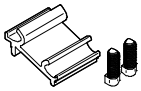	120, 150		**574561**	**DHAM-ME-N2-50-CL**	
Support profile HMIA					
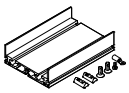	70 … 150	• For guiding an energy chain • For ELGA-TB-KF • For ELGA-TB-RF • For ELGA-TB-G	**539379**	**HMIA-E07-**	1

1) Packaging unit

Proximity sensors for ELGA-TB-KF, ELGA-TB-RF, ELGA-TB-G

Ordering data – Proximity sensor for T-slot, inductive Technical data ➔ Internet: sies

	Type of mounting	Electrical connection	Switching output	Cable length [m]	Order code	Part No.	Type
N/O contact							
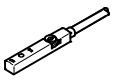	Insertable in the slot from above, flush with the cylinder profile	Cable, 3-wire	PNP	7.5	SA	**551386**	**SIES-8M-PS-24V-K-7,5-OE**
		Plug connector M8x1, 3-pin		0.3	–	**551387**	**SIES-8M-PS-24V-K-0,3-M8D**
		Cable, 3-wire	NPN	7.5	–	**551396**	**SIES-8M-NS-24V-K-7,5-OE**
		Plug connector M8x1, 3-pin		0.3	–	**551397**	**SIES-8M-NS-24V-K-0,3-M8D**
N/C contact							
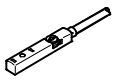	Insertable in the slot from above, flush with the cylinder profile	Cable, 3-wire	PNP	7.5	SB	**551391**	**SIES-8M-PO-24V-K-7,5-OE**
		Plug connector M8x1, 3-pin		0.3	–	**551392**	**SIES-8M-PO-24V-K-0,3-M8D**
		Cable, 3-wire	NPN	7.5	–	**551401**	**SIES-8M-NO-24V-K-7,5-OE**
		Plug connector M8x1, 3-pin		0.3	–	**551402**	**SIES-8M-NO-24V-K-0,3-M8D**

Proximity sensors for ELGA-TB-KF, ELGA-TB-RF, ELGA-TB-G

Ordering data – Proximity sensor M8 (round design), inductive — Technical data ➔ Internet: sien

	Electrical connection	LED	Switching output	Cable length [m]	Order code	Part No.	Type
N/O contact							
	Cable, 3-wire	■	PNP	2.5	SC	★ **150386**	**SIEN-M8B-PS-K-L**
			NPN	2.5	–	★ **150384**	**SIEN-M8B-NS-K-L**
	Plug connector M8x1, 3-pin	■	PNP	–	SE	★ **150387**	**SIEN-M8B-PS-S-L**
			NPN	–	–	★ **150385**	**SIEN-M8B-NS-S-L**
N/C contact							
	Cable, 3-wire	■	PNP	2.5	SD	**150390**	**SIEN-M8B-PO-K-L**
			NPN	2.5	–	**150388**	**SIEN-M8B-NO-K-L**
	Plug connector M8x1, 3-pin	■	PNP	–	SF	**150391**	**SIEN-M8B-PO-S-L**
			NPN	–	–	**150389**	**SIEN-M8B-NO-S-L**

Proximity sensors for ELGA-TB-KF-F1, ELGA-TB-RF-F1

Ordering data – Proximity sensors for T-slot, magnetic reed — Technical data ➔ Internet: sme

	Type of mounting	Switching output	Electrical connection	Cable length [m]	Part No.	Type
N/O contact						
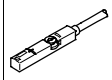	Insertable in the mounting kit from above	Contacting	Cable, 3-wire	2.5	★ **543862**	**SME-8M-DS-24V-K-2,5-OE**
				5.0	★ **543863**	**SME-8M-DS-24V-K-5,0-OE**
			Cable, 2-wire	2.5	★ **543872**	**SME-8M-ZS-24V-K-2,5-OE**
			Plug connector M8x1, 3-pin	0.3	★ **543861**	**SME-8M-DS-24V-K-0,3-M8D**
N/C contact						
	Insertable in the mounting kit lengthwise	Contacting	Cable, 3-wire	7.5	**160251**	**SME-8-O-K-LED-24**

Connecting cables for ELGA-TB-...

Ordering data – Connecting cables — Technical data ➔ Internet: nebu

	Electrical connection, left	Electrical connection, right	Cable length [m]	Part No.	Type
	Straight socket, M8x1, 3-pin	Cable, open end, 3-wire	2.5	**159420**	**SIM-M8-3GD-2,5-PU**
			2.5	★ **541333**	**NEBU-M8G3-K-2.5-LE3**
			5	★ **541334**	**NEBU-M8G3-K-5-LE3**
	Angled socket, M8x1, 3-pin	Cable, open end, 3-wire	2.5	★ **541338**	**NEBU-M8W3-K-2.5-LE3**
			5	★ **541341**	**NEBU-M8W3-K-5-LE3**

Ordering data – Encoder cables for displacement encoder ELGA-...-M1/-M2 — Technical data ➔ Internet: nebm

	Electrical connection, left	Electrical connection, right	Cable length [m]	Part No.	Type
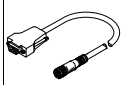	Displacement encoder ELGA-...-M1/-M2	Motor controller CMMP-AS	5	**1599105**	**NEBM-M12G8-E-5-S1G9-V3**
			10	**1599106**	**NEBM-M12G8-E-10-S1G9-V3**
			15	**1599107**	**NEBM-M12G8-E-15-S1G9-V3**
			X[1]	**1599108**	**NEBM-M12G8-E-...-S1G9-V3**

1) Max. cable length 25 m.

Festo core product range

★ Ready for dispatch from the Festo factory in 24 hours
☆ Ready for dispatch in 5 days maximum from stock