Mini slides SLT/SLS/SLF

FESTO

Mini slides SLT/SLS/SLF

Key features

General information

- Double-acting drives
- Precise and rigid guide
- Versatile air connections
- Sensors can be integrated
- Highly flexible thanks to versatile, direct assembly and connection options on:
  - Drive body
  - Slide
  - Yoke plate

Mini slides SLT

- Powerful
- Compact design through air connections at rear
- Two adjustable end-position cushioning systems:
  - Flexible cushioning elements
  - Hydraulic shock absorbers
- Extremely compact drive thanks to cushioning systems integrated in the profile section
- Versatile combination options include:
  - Drives
  - Grippers
- System product for handling and assembly technology

Mini slides SLS

- Slim design
- Integrated end-position cushioning:
  - Flexible cushioning elements

Mini slides SLF

- Flat
- Adjustable end-position cushioning
  - Flexible cushioning elements
- Versatile combination options on:
  - Drives
- System product for handling and assembly technology

Mini slides SLT/SLS/SLF

System example

System product for handling and assembly technology

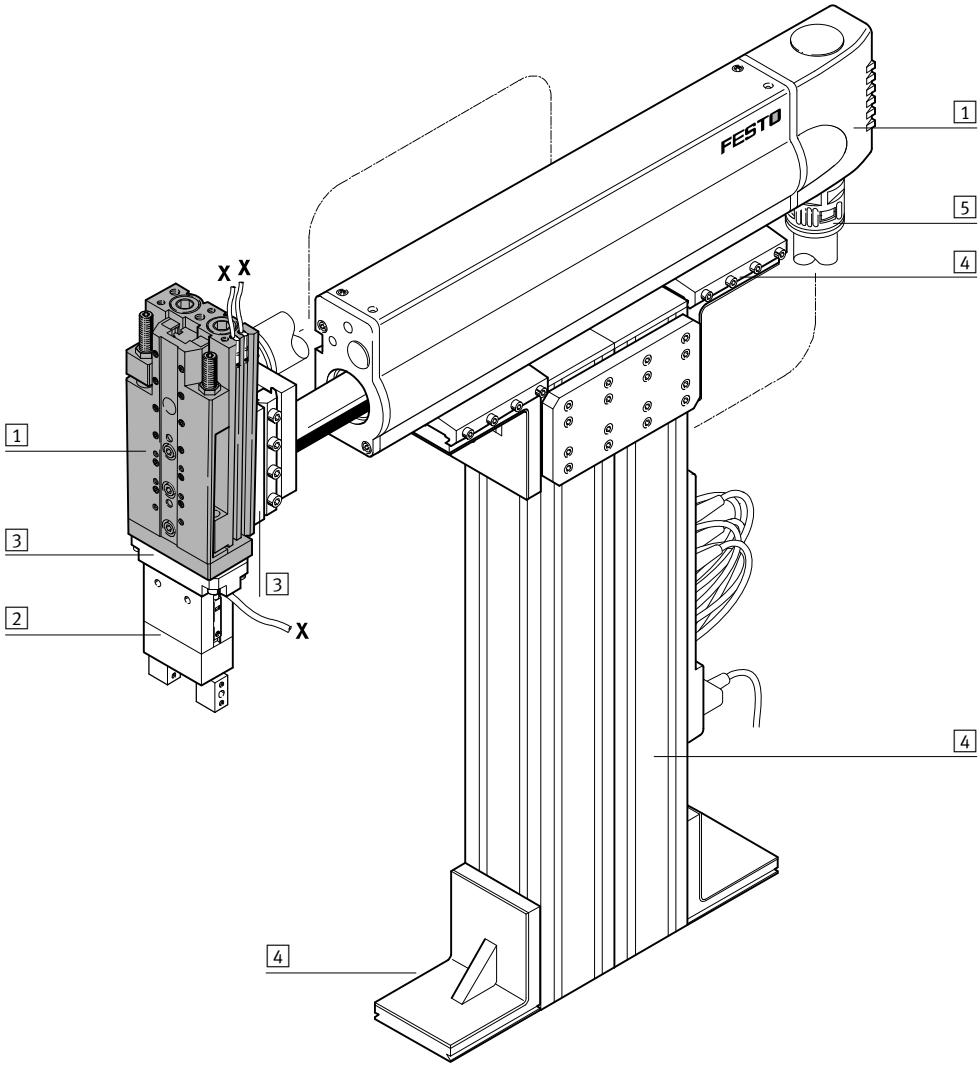

System elements and accessories

		Brief description	➔ Page/Internet
1	Drives	Diverse possible combinations in handling and assembly technology	drive
2	Grippers	Wide range of variation options within handling and assembly technology	gripper
3	Adapters	For drive/drive combinations	40
		For drive/gripper combinations	gripper
4	Basic components	Profiles and profile connections as well as profile/drive connections	basic component
5	Installation components	For achieving a clear-cut, safe layout of electrical cables and tubing	installation component
–	Axes	Diverse possible combinations in handling and assembly technology	axes
–	Motors	Servo and stepper motors, with or without gearing	motor

Mini slides SLT/SLS/SLF

Key features

Drive

Mini slides SLT/SLS/SLF are driven with double-acting cylinders.
SLT: with two pistons
SLS/SLF: with one piston

Guide

The slide moves on a pre-loaded, backlash-free precision ball bearing cage guide of high rigidity with high torque and load absorption.

SLT-/SLS-/SLF-6/-10/-16

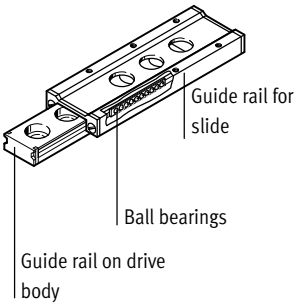

SLT-20/-25

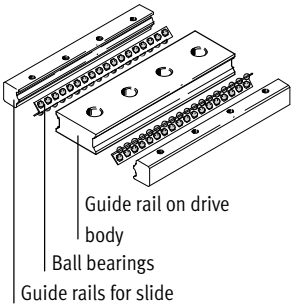

The powerful mini slide

SLT

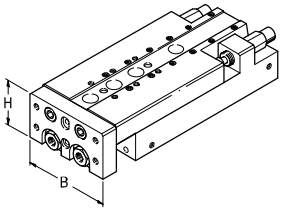

Piston ∅	Width (W)	x	Height (H)
2x 6 mm	35	x	20 mm
2x 10 mm	50	x	30 mm
2x 16 mm	66	x	40 mm
2x 20 mm	85	x	49 mm
2x 25 mm	104	x	60 mm

The super slim mini slide

SLS

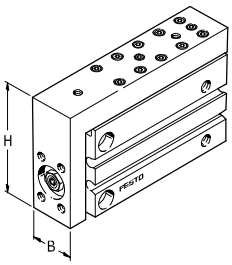

Piston ∅	**Width (W)**	x	Height (H)
6 mm	**16**	x	39 mm
10 mm	**20**	x	45 mm
16 mm	**24**	x	51 mm

The extremely flat mini slide

SLF

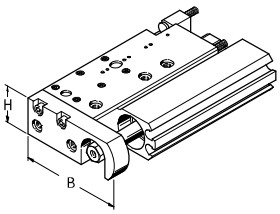

Piston ∅	Width (W)	x	**Height (H)**
6 mm	46	x	**11 mm**
10 mm	48	x	**15 mm**
16 mm	62	x	**21 mm**

Mini slides SLT/SLS/SLF

Key features

Versatile

through

- Attachment
- Mounting
- Air connection
- End-position cushioning
- Sensors

1 Attachment:
The drive can be directly attached via through or threaded holes (with appropriate screws and centring sleeves ZBH).

2 Mounting surface:
Direct attachment of devices and loads is made possible with threaded holes in the slide and the yoke plate (using appropriate screws and centring sleeves ZBS/ZBH) (e.g. SLT: semi-rotary drives and grippers).

3 Versatile air connections

4 Adjustable end-position cushioning systems:
1) SLT-...-P-A/SLF-...-P-A
with flexible cushioning elements in the end positions
2) SLT-...-P-A with stop PF-...-SLT
allows precise, metallic positioning in the end positions
3) SLT-...-A-CC-B
with hydraulic shock absorbers YSRT on rear cover for optimum end-position adjustment

5 Sensors can be integrated
Sensor slots for one or more proximity sensors SME/SMT-10.
For space-saving, reliable sensing of piston positions.
Proximity sensors can be freely moved and clamped in their slots.

SLT

SLT-...-CC-B

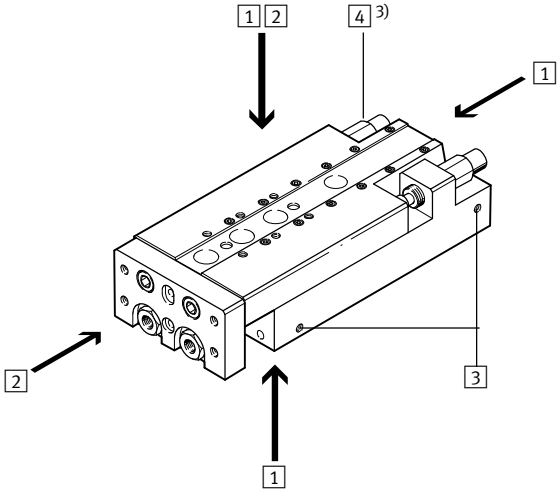

SLT-...-P-A

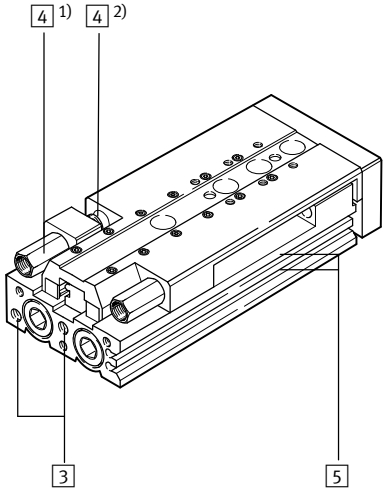

SLS

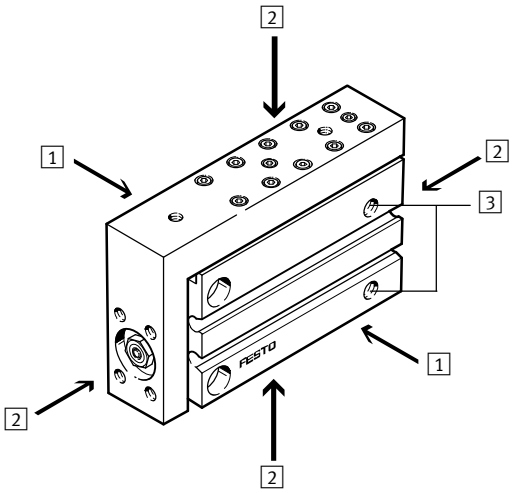

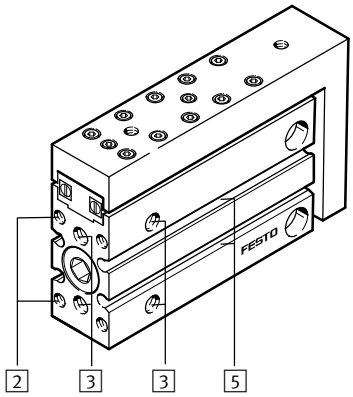

SLF

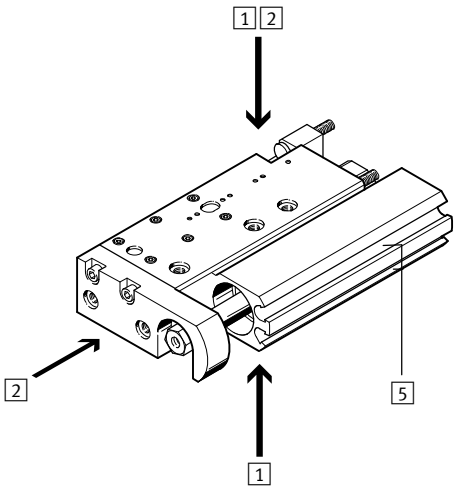

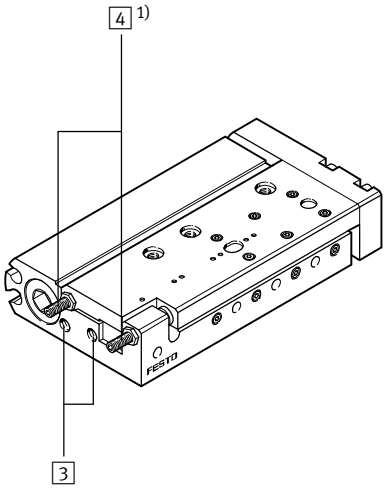

Mini slides SLT/SLS/SLF

Product range overview

Function	Design	Piston ∅ [mm]	Stroke [mm]	Cushioning		Position sensing	➔ Page/ Internet
				flexible cushioning elements	hydraulic shock absorbers		
Double-acting	Powerful, SLT-...-P-A						
	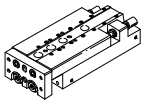	6, 10, 16, 20, 25	10, 20, 30, 40, 50, 80, 100, 125, 150, 200	■	–	■	7
	Powerful, SLT-...-A-CC-B						
	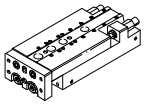	10, 16, 20, 25	30, 40, 50, 80, 100, 125, 150, 200	–	■	■	7
	Slim, SLS-...-P-A						
	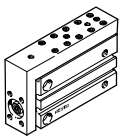	6, 10, 16	5, 10, 15, 20, 25, 30	■	–	■	21
	Flat, SLF-...-P-A						
	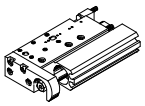	6, 10, 16	10, 20, 30, 40, 50, 80	■	–	■	29

Comparison between pneumatic mini slide SLT and electric mini slide SLTE

	Pneumatic: SLT	Electric: SLTE
	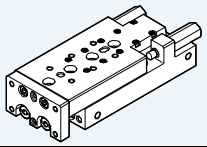	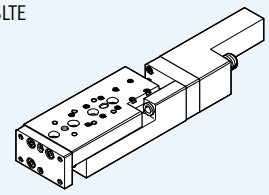
Advantages		
	• High feed force • High speed • Fast positioning time • Compact length	• Gentle starting and stopping • Constant and precise speed (2 … 200 mm/s) • Flexible positioning without mechanical devices • Programmable drive profile
Guide		
• Preloaded, backlash-free, precise and rigid ball bearing cage guide • High torque and load absorption	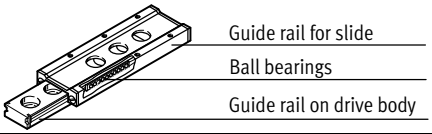	
Dimensions		
• Identical width and height dimensions Type / Width (B) x Height (H) SLT(E)-10 / 50 x 30 mm SLT(E)-16 / 66 x 40 mm	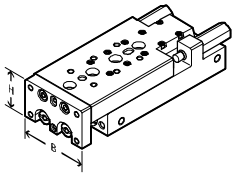	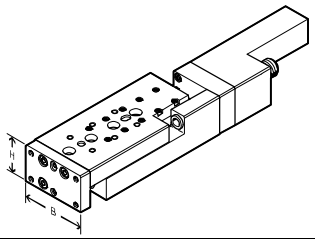
Interfaces		
• Identical mounting and attachment options 1 Mounting surfaces: Direct mounting using threaded holes and through-holes 2 Attachment surfaces: Direct mounting of loads and devices (e.g. SLT: semi-rotary drives and grippers) by means of threaded holes in slide and yoke plate	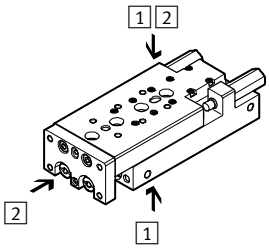	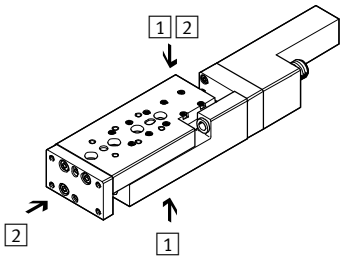
Technical data		
Piston ∅ [mm]	6 … 25	10, 16
Stroke [mm]	10 … 200	50 … 150
Max. speed [m/s]	0.8	0.2
Repetition accuracy at end positions [mm]	±0.02	±0.1
Intermediate positions	None	Any

Mini slides SLT

Peripherals overview

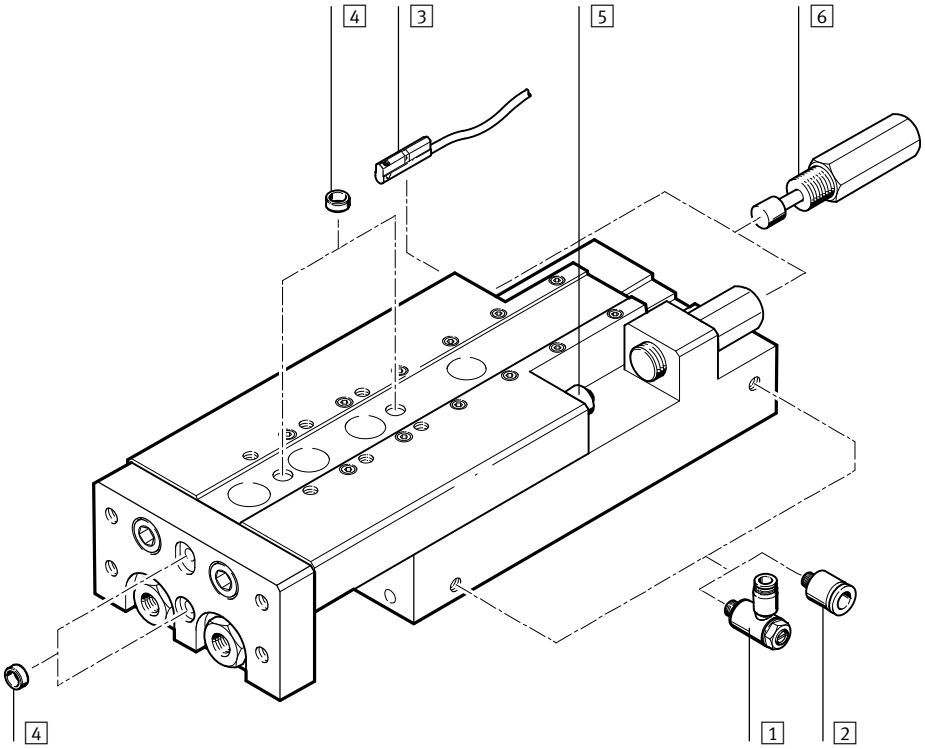

Note

End stops must not be removed.

Accessories			
		Description	➔ Page/Internet
1	One-way flow control valve GRLA	For speed regulation	38
2	Push-in fitting QS	For connecting compressed air tubing with standard external diameters	qs
3	Proximity sensor SME/SMT-10	Sensor slots for one or more proximity sensors	39
4	Centring pin/sleeve ZBS/ZBH	For centring loads and attachments	38
5	Cushioning with stop PF	Precision metal stop for small loads at slow speed. At an operating pressure > 3 bar, the stop ensures precise, metal-to-metal contact. The stop can be retrofitted.	38
6	Cushioning with shock absorber YSRT	For large loads and high speed. Ensures precise, metal-to-metal contact after the cushioning.	ysrt
7	Cushioning P	Standard version with flexible cushioning elements. Low-cost, no metal-to-metal contact.	20

Cushioning variants

7 SLT-...-P-A
with cushioning P

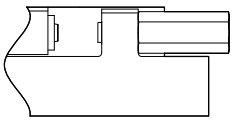

5 SLT-...-P-A
with cushioning PF
(stop can be retrofitted)

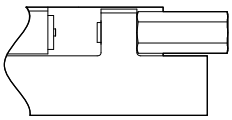

6 SLT-...-CC-B
with cushioning YSRT

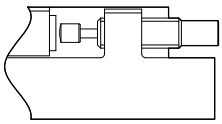

Mini slides SLT

Type codes

SLT	–	16	–	80	–	P	–	A

Type	
Double-acting	
SLT	Mini-slide

Piston ∅ [mm]

Stroke [mm]

Cushioning	
P	Flexible cushioning, non-adjustable

Position sensing	
A	For proximity sensing

SLT	–	16	–	80	–	A	–	CC	–	B

Type	
Double-acting	
SLT	Mini-slide

Piston ∅ [mm]

Stroke [mm]

Position sensing	
A	For proximity sensing

Cushioning	
CC	Linear, self-adjusting shock absorber

Version	
B	B series

Mini slides SLT

Technical data

Function

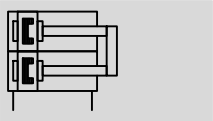

www.festo.com

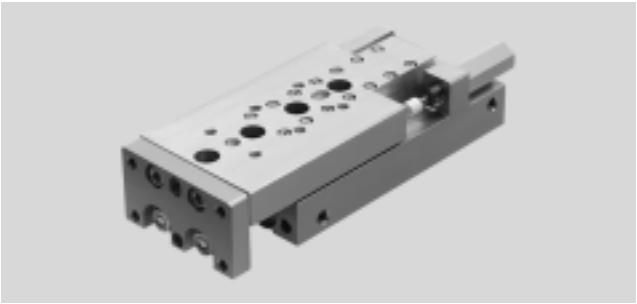

Diameter
6 … 25 mm

Stroke length
10 … 200 mm

General technical data						
Piston ∅		6	10	16	20	25
Pneumatic connection		M5			G⅛	
Design		Kinematic yoke system				
Guide		Parallel piston rods, ball bearing guide				
Cushioning	Cushioning P	Non-adjustable at either end				
	Shock absorber	–	Self-adjusting at both ends			
Position sensing		For proximity sensing				
Type of mounting		Via through-holes				
		Via female thread				
Mounting position		Any				
Adjustable end-position range	Per end stop [mm]	7	4	12		
	Per shock absorber [mm]	–	4	5	12	
Cushioning length with shock absorbers [mm]		–	5		8	12
Max. advancing speed [m/s]		0.5[1]	0.8			
Max. retracting speed [m/s]		0.5[1]	0.8			
Repetition accuracy	Stop PF [mm]	0.02				
	Shock absorber [mm]	–	0.02			

1) Must be throttled externally

Operating and environmental conditions						
Piston ∅		6	10	16	20	25
Operating medium		Compressed air in accordance with ISO 8573-1:2010 [7:4:4]				
Note on operating/pilot medium		Operation with lubricated medium possible (in which case lubricated operation will always be required)				
Operating pressure	[bar]	1.5 … 10	1 … 10			
Ambient temperature[1]	[°C]	–20 … +60				

1) Note operating range of proximity sensors

Forces [N] and impact energy [Nm]						
Piston ∅		6	10	16	20	25
Theoretical force at 6 bar, advancing		34	94	242	376	590
Theoretical force at 6 bar, retracting		25	79	218	317	495
Max. impact energy at the end positions[1]	Stop PF[2]	0.0005	0.007	0.015	0.030	0.060
	Cushioning P[2]	0.016	0.1	0.3	0.4	0.5
	Shock absorber CC[2]	–	1	2	3	10

1) Loads moved by the slides must be taken into consideration for the calculation of end-position cushioning energy
2) Note also the graphs illustrating piston speed as a function of working load ➔ 11

Weights [g]											
Piston ∅		6		10		16		20		25	
	Stroke	1	2	1	2	1	2	1	2	1	2
1 Product weight	10	128	42	304	125	588	255	1132	533	1866	920
2 Moving load	20	145	47	298	122	568	250	1117	526	1852	905
	30	161	53	334	141	617	265	1112	518	1835	891
	40	184	64	365	149	690	298	1199	548	2002	964
	50	223	85	427	179	762	327	1347	608	2152	1036
	80	–	–	581	247	1030	451	1767	793	2767	1326
	100	–	–	–	–	1247	543	2088	924	3209	1516
	125	–	–	–	–	1655	749	2681	1143	4030	1899
	150	–	–	–	–	1802	797	2923	1253	4549	2087
	200	–	–	–	–	–	–	3666	1490	5520	2544

Materials

Sectional view

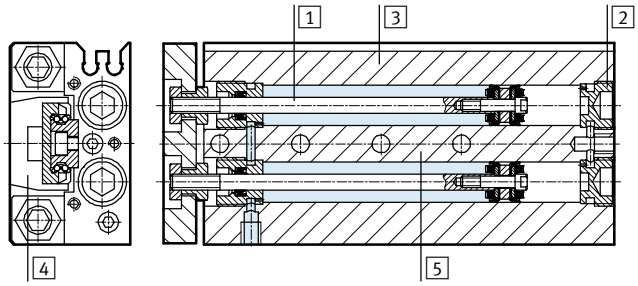

Mini slide		
1	Piston rod	High-alloy steel
2	Cap	Wrought aluminium alloy, anodised
3	Housing	Wrought aluminium alloy, anodised
4	Slide	Wrought aluminium alloy, anodised
5	Guide	Tempered steel
–	Seals	Hydrogenated nitrile rubber
	Note on materials	Free of copper and PTFE

Piston speed v as a function of working load m

The piston speed as a function of working load may not be exceeded as the kinetic impact or residual energy in the end positions can result in damage to the drive.

For the mini slide SLT with shock absorbers, the speed should not be less than 0.1 m/s, as otherwise the service life of the shock absorber will be reduced.

SLT-6/-10/-16-...-P-A

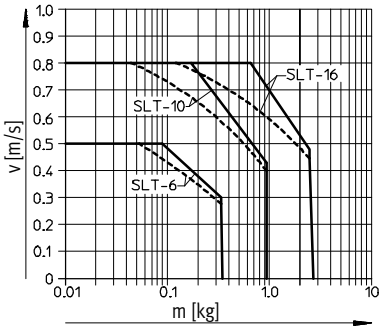

SLT-20-...-P-A

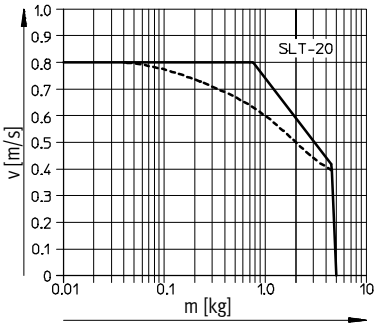

SLT-25-...-P-A

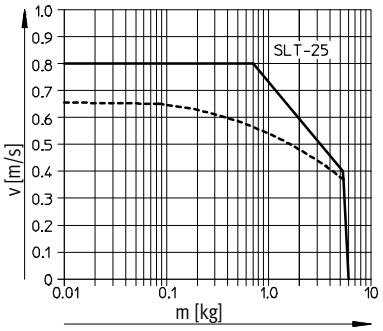

SLT-10/-16/-20/-25-...-A-CC-B

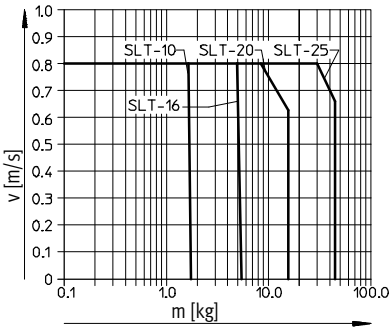

Min. stroke
Max. stroke

Dynamic characteristic load values

Torques are indicated with reference to the centre of the guide.
They must not be exceeded during dynamic operation. Special attention must be paid to the cushioning phase.

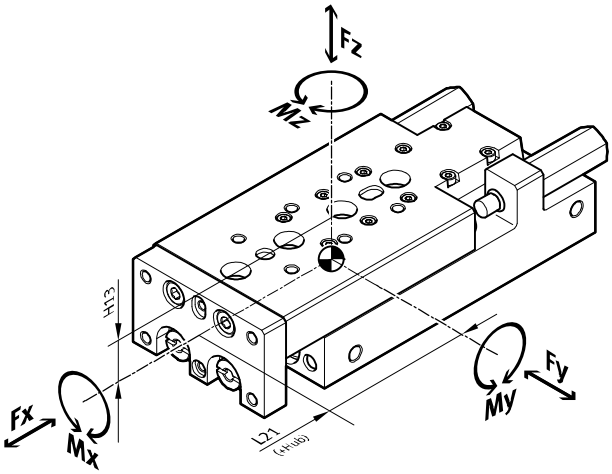

If the drive is simultaneously subjected to several of the indicated forces and torques, the following equation must be satisfied in addition to the indicated maximum loads.

$$\frac{|Fy|}{Fy_{max.}} + \frac{|Fz|}{Fz_{max.}} + \frac{|Mx|}{Mx_{max.}} + \frac{|My|}{My_{max.}} + \frac{|Mz|}{Mz_{max.}} \leq 1$$

Position of guide centre

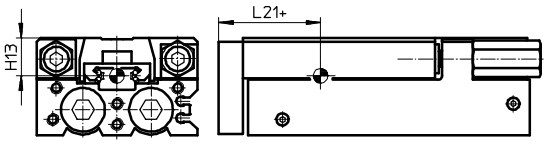

\+ plus stroke length

Calculation example

Given:

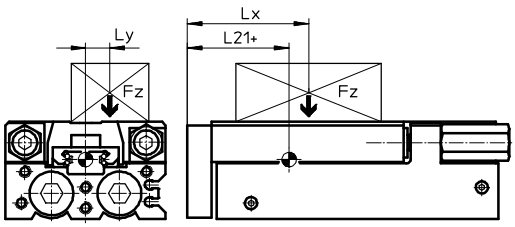

		To be found:
Mini slide	= SLT-10	F_y, F_z, Mx, My, Mz
Stroke length	= 80 mm	and
Lever arm L_x	= 50 mm	verification of function with combined
Lever arm L_y	= 30 mm	load
Mass F_z	= 0.8 kg	
Acceleration a	= 0 m/s^2	

Solution:

L21 = 41 mm from table

F_y = 0 N

F_z = m x g
= 0.8 kg x 9.81 m/s^2 = 7.848 N

M_x = m x g x L_y
= 0.8 kg x 9.81 m/s^2 x 30 mm = 0.236 Nm

M_y = m x g x [(L21+stroke)-L_x]
= 0.8 kg x 9.81 m/s^2 [(41 mm + 80 mm) – 50 mm] = 0.557 Nm

M_z = 0 Nm

Combined load:

$$\frac{|Fy|}{Fy_{max.}} + \frac{|Fz|}{Fz_{max.}} + \frac{|Mx|}{Mx_{max.}} + \frac{|My|}{My_{max.}} + \frac{|Mz|}{Mz_{max.}}$$

$$= 0 + \frac{7.848N}{410N} + \frac{0.2366Nm}{4.3Nm} + \frac{0.557Nm}{1.5Nm} + 0 = 0.445 \leq 1$$

Mini slides SLT

Technical data

Permissible forces and torques						Geometric characteristics	
Piston ∅	Stroke	Fy_{max} [N]	Fz_{max} [N]	Mx_{max} [Nm]	My_{max}, Mz_{max} [Nm]	H13 [mm]	L21 [mm]
6							
	10	200	200	1.1	0.7	7	21.5
	20	160	160	1.1	0.7		21.5
	30	140	140	0.7	0.5		21.5
	40	150	150	0.9	0.5		25
	50	190	190	1.4	0.5		30.5
10							
	10	470	470	2.1	1.6	13	24.5
	20	370	370	1.7	1.4		24.5
	30	390	390	2.5	1.4		28.5
	40	350	350	2.2	1.3		28.5
	50	390	390	3.1	1.4		33.5
	80	410	410	4.3	1.5		41
16							
	10	820	820	6.1	4.2	16	33
	20	650	650	4.7	3.4		33
	30	530	530	4.2	3.0		31.5
	40	490	490	3.8	2.7		31.5
	50	510	510	4.6	2.8		35
	80	520	520	6.0	2.8		41.5
	100	600	600	9.1	3.2		51.5
	125	960	960	12.6	3.5		66.5
	150	660	660	12.6	3.5		66.5
20							
	10	1600	1600	16	18	16.5	38.5
	20	1270	1270	13	14		38.5
	30	1110	1110	11	12		38.5
	40	930	930	10	11		38.5
	50	1080	1080	9	10		41
	80	1030	1030	14	11		48.5
	100	1160	1160	18	11		58
	125	1380	1380	37	17		71
	150	1300	1300	47	17		79
	200	1170	1170	64	17		92.5
25							
	10	1840	1840	19	21	23.5	45.5
	20	1460	1460	16	16		45.5
	30	1280	1280	14	14		45.5
	40	1310	1310	13	12		45.5
	50	1080	1080	12	11		45.5
	80	1030	1030	14	11		50.5
	100	1160	1160	18	11		60
	125	1380	1380	37	17		72.5
	150	1300	1300	47	17		80.5
	200	1170	1170	64	17		94.5

Dimensions Download CAD data ➔ **www.festo.com**

∅ 6

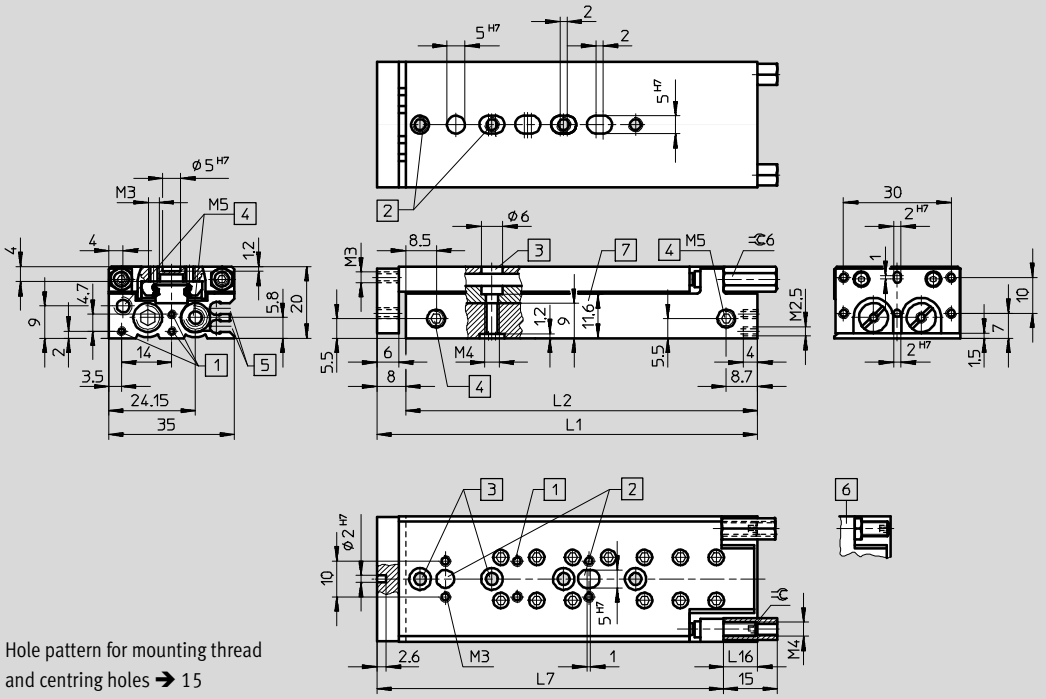

Hole pattern for mounting thread and centring holes ➔ 15

1. Mounting thread
2. Centring holes (centring sleeves included in scope of delivery)
3. Through-holes for mounting the drive
4. Supply ports
5. Sensor slots for proximity sensor SME/SMT-10
6. Slim lock nuts are supplied loose
7. Through-hole length for mounting screws

∅ [mm]	Stroke [mm]	L1	L2	L7	L16 1)	1)
6	10	48	40	38	14	2
	20	58	50	48		
	30	68	60	58		
	40	85	77	75		
	50	106	98	96		

1) With flexible cushioning

Hole pattern for mounting thread and centring holes

SLT-6-10

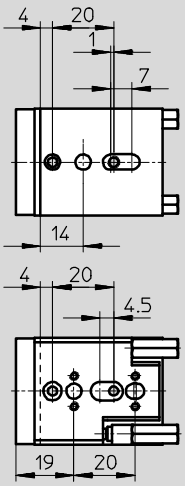

SLT-6-20

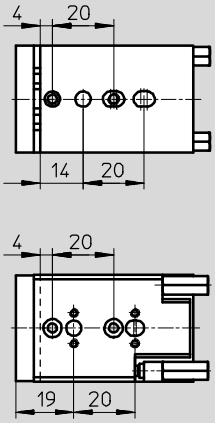

SLT-6-30

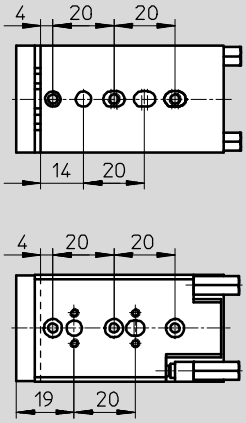

SLT-6-40

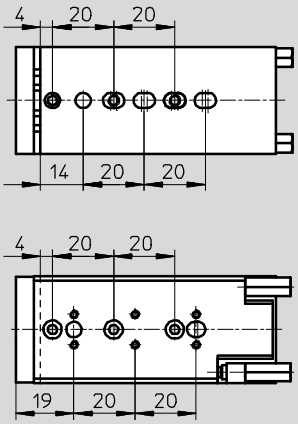

SLT-6-50

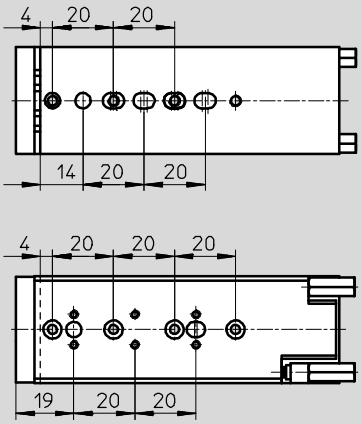

Dimensions Download CAD data ➔ **www.festo.com**

∅ 10-...-25

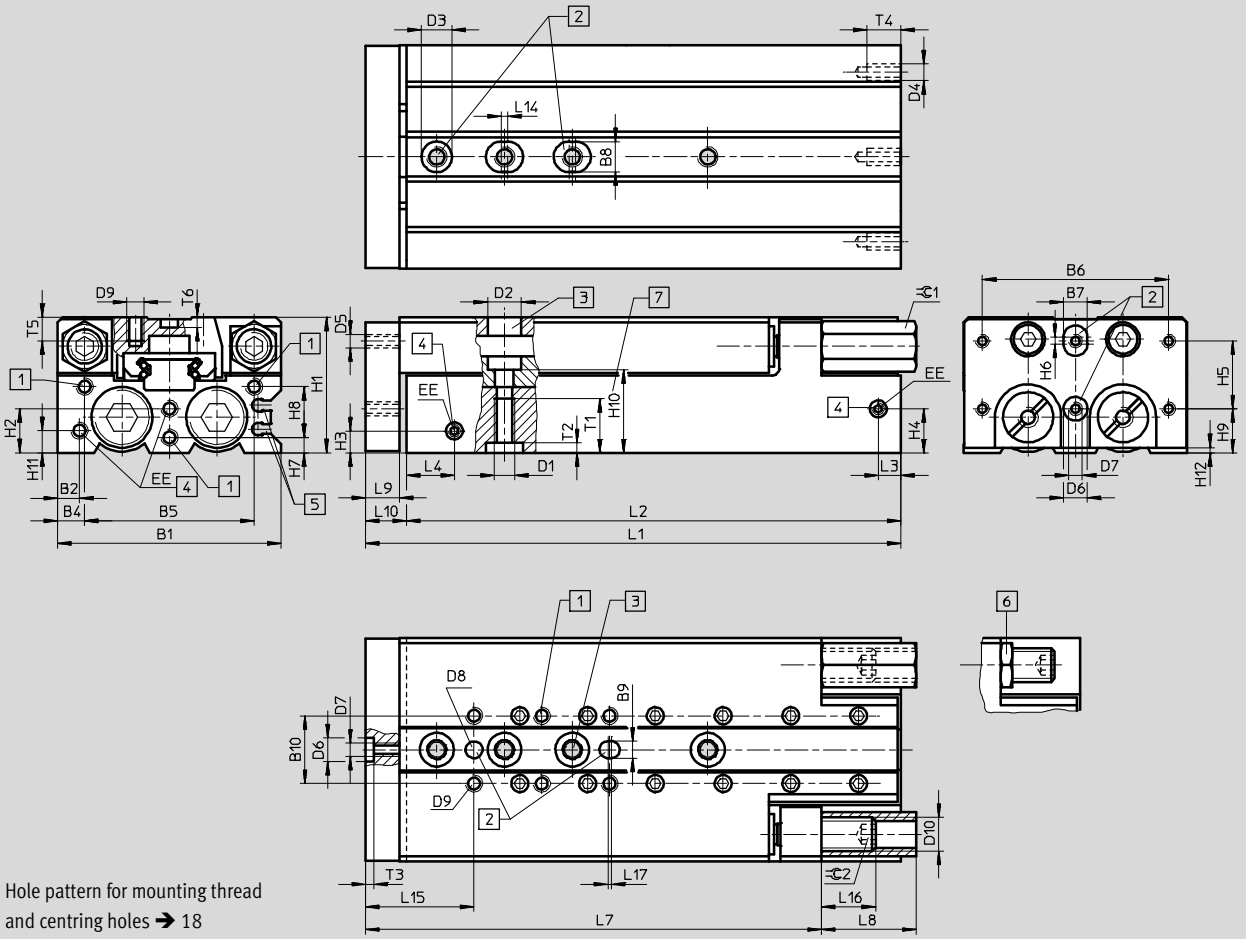

Hole pattern for mounting thread and centring holes ➔ 18

1 Mounting thread
2 Centring holes (centring sleeves included in scope of delivery)
3 Through-holes for mounting the drive
4 Supply ports
5 Sensor slots for proximity sensor SME/SMT-10
6 Slim lock nuts are supplied loose
7 Through-hole length for mounting screws

∅ [mm]	B1	B2	B4	B5	B6	B7 H7	B8 H7	B9 H7	B10	D1	D2 ∅	D3 ∅ H7	D4	D5	D6 ∅ H7	D7
10	50	5.5	10	30	40	5	7	5	20	M5	8	7	M3	M4	5	M3
16	66	6.5	8	50	55	7	9			M6	10	9	M5	M5	7	M4
20	85	7	15	55	70	9	12	9	40	M8	11	12			9	M5
25	104	8	12	80	80	12		12					M6	M6	12	M6

∅ [mm]	D8 ∅ H7	D9	D10	EE	H1	H2	H3	H4	H5	H6	H7	H8	H9	H10	H11	H12
10	5	M4	M8x1	M5	30	9.4	5.5	11	20	2	4	10	5	15.15	5.5	1.5
16	5	M5	M10x1		40	13	6.5	13			4.5	15	13	20	6.5	1.5
20	9		M12x1	G⅛	49	19.5	9	19.7			6	19	16	30.5	9	2.5
25	12	M6	M16x1	G⅛	60	21	10	21	40		5	25	10	34.5	10	1.5

∅ [mm]	Stroke [mm]	L1	L2	L3	L4	L7	L8	L9	L10	L14 min.	L15
10	10	72	62	7	11.7	62.5	15	8	10	2	25
	20	72									
	30	82	72			72.5					
	40	92	82				25				
	50	112	102			92.5					
	80	162	152			140.5					
16	10	80	68	6.7	14.2	63.5	22	10	12	2	32
	20										
	30	87	75			70.5					
	40	97	85			80.5					
	50	112	100			90.5	28				
	80	158	146			134.5					
	100	199	187			176.5					
	125	257	245	8.2	16.6	233.5					
	150	282	270			258.5					
20	10	97	85	10.7	15.2	74	28	10	12	2	25
	20										
	30										
	40	107	95			84					
	50	122	110			92	37				
	80	167	155			135					
	100	203	191			171					
	125	262	250	10.3	17.5	208	59				
	150	302	290			249					
	200	377	365			323					
25	10	108	94	10.7	18.7	88.5	25	12	14	2	30
	20										
	30										
	40	118	104			92.5	34				
	50	131	117			102.5					
	80	177	163			132.5	51				
	100	210	196			159.5	57				
	125	264	250	10	21.5	212.5					
	150	304	290			252.5					
	200	379	365			328.5					

∅ [mm]	L16 1)	L16 2)	L17 min.	T1	T2	T3	T4	T5	T6	⌯ 1	⌯ 2 1)	⌯ 2 2)
10	20.7	8	1	12	1.5	1.3	7	8	1.2	10	2.5	4
16	23.5	16		16	2.1	1.6	10	7		13	3	5
20	34	17.5		20	2.6	2.1		10	2.1	15	4	6
25	49.5	18				2.6	12	11	2.6	19	5	8

1) With hydraulic shock absorbers
2) With flexible cushioning

Hole pattern for mounting thread and centring holes

SLT-10-10 ... 30

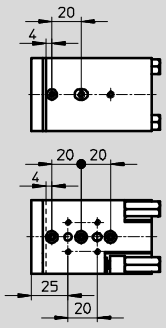

SLT-10-40

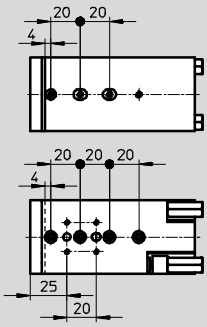

SLT-10-50

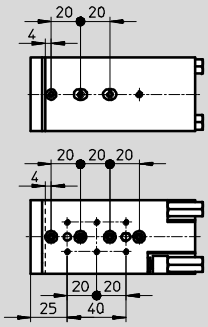

SLT-10-80

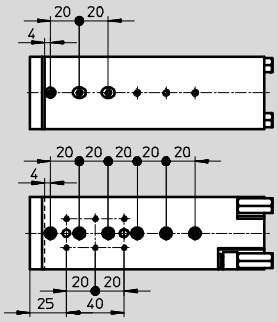

SLT-16-10 ... 40

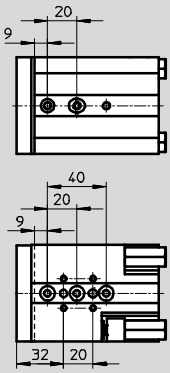

SLT-16-50

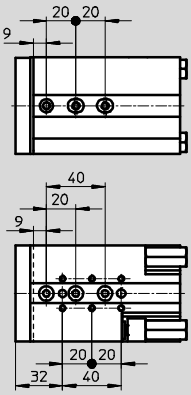

SLT-16-80

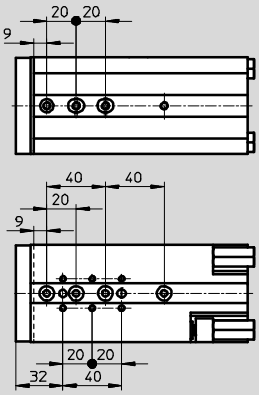

SLT-16-100

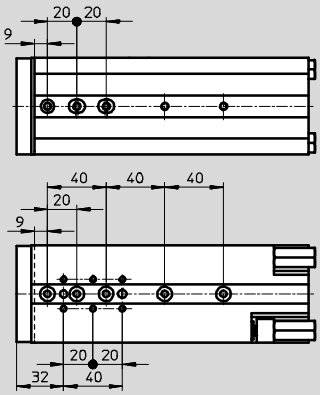

SLT-16-125/-150

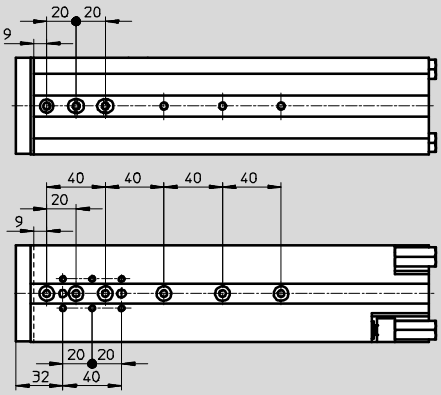

Hole pattern for mounting thread and centring holes

SLT-20-10 ... 40

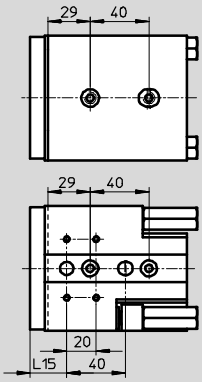

SLT-25-10 ... 40

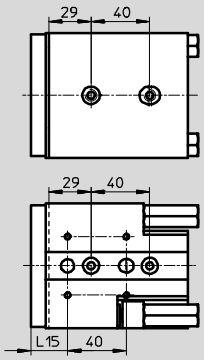

SLT-20/-25-50

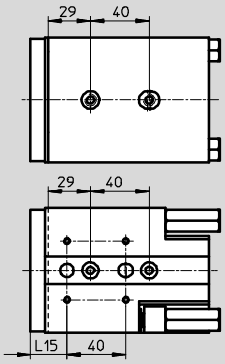

SLT-20/-25-80

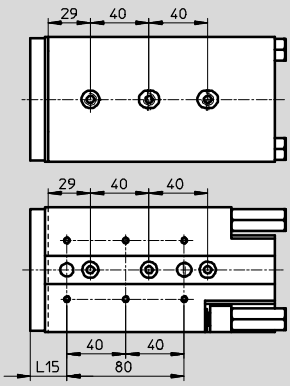

SLT-20/-25-100

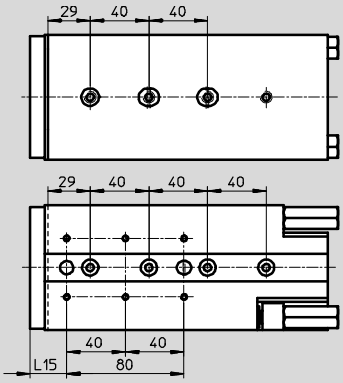

SLT-20/-25-125

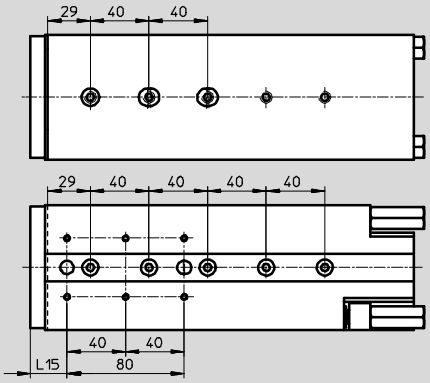

SLT-20/-25-150

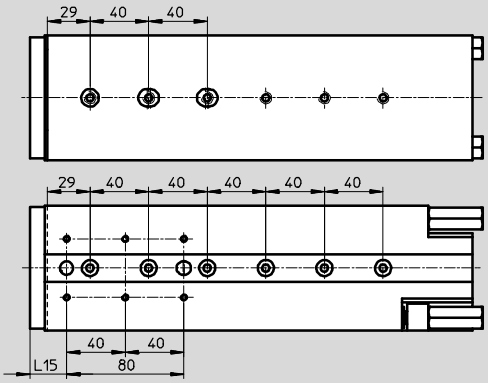

SLT-20/-25-200

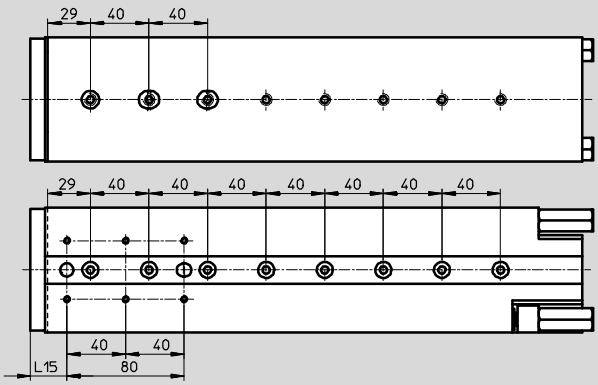

Ordering data					
∅ [mm]	Stroke [mm]	SLT-...-P-A Part No.	Type	SLT-...-A-CC-B Part No.	Type
6					
	10	**170549**	**SLT-6-10-P-A**	–	
	20	**170550**	**SLT-6-20-P-A**		
	30	**170551**	**SLT-6-30-P-A**		
	40	**170552**	**SLT-6-40-P-A**		
	50	**170553**	**SLT-6-50-P-A**		
10					
	10	**170554**	**SLT-10-10-P-A**	–	
	20	**170555**	**SLT-10-20-P-A**		
	30	**170556**	**SLT-10-30-P-A**	**197891**	**SLT-10-30-A-CC-B**
	40	**170557**	**SLT-10-40-P-A**	**197892**	**SLT-10-40-A-CC-B**
	50	**170558**	**SLT-10-50-P-A**	**197893**	**SLT-10-50-A-CC-B**
	80	**170559**	**SLT-10-80-P-A**	**197894**	**SLT-10-80-A-CC-B**
16					
	10	**170560**	**SLT-16-10-P-A**	–	
	20	**170561**	**SLT-16-20-P-A**		
	30	**170562**	**SLT-16-30-P-A**	**197895**	**SLT-16-30-A-CC-B**
	40	**170563**	**SLT-16-40-P-A**	**197896**	**SLT-16-40-A-CC-B**
	50	**170564**	**SLT-16-50-P-A**	**197897**	**SLT-16-50-A-CC-B**
	80	**170565**	**SLT-16-80-P-A**	**197898**	**SLT-16-80-A-CC-B**
	100	**170566**	**SLT-16-100-P-A**	**197899**	**SLT-16-100-A-CC-B**
	125	**188412**	**SLT-16-125-P-A**	**197900**	**SLT-16-125-A-CC-B**
	150	**188413**	**SLT-16-150-P-A**	**197901**	**SLT-16-150-A-CC-B**
20					
	10	**170567**	**SLT-20-10-P-A**	–	
	20	**170568**	**SLT-20-20-P-A**		
	30	**170569**	**SLT-20-30-P-A**	**197902**	**SLT-20-30-A-CC-B**
	40	**170570**	**SLT-20-40-P-A**	**197903**	**SLT-20-40-A-CC-B**
	50	**170571**	**SLT-20-50-P-A**	**197904**	**SLT-20-50-A-CC-B**
	80	**170572**	**SLT-20-80-P-A**	**197905**	**SLT-20-80-A-CC-B**
	100	**170573**	**SLT-20-100-P-A**	**197906**	**SLT-20-100-A-CC-B**
	125	**188416**	**SLT-20-125-P-A**	**197907**	**SLT-20-125-A-CC-B**
	150	**188417**	**SLT-20-150-P-A**	**197908**	**SLT-20-150-A-CC-B**
	200	**188418**	**SLT-20-200-P-A**	**197909**	**SLT-20-200-A-CC-B**
25					
	10	**170574**	**SLT-25-10-P-A**	–	
	20	**170575**	**SLT-25-20-P-A**		
	30	**170576**	**SLT-25-30-P-A**	**197910**	**SLT-25-30-A-CC-B**
	40	**170577**	**SLT-25-40-P-A**	**197911**	**SLT-25-40-A-CC-B**
	50	**170578**	**SLT-25-50-P-A**	**197912**	**SLT-25-50-A-CC-B**
	80	**170579**	**SLT-25-80-P-A**	**197913**	**SLT-25-80-A-CC-B**
	100	**170580**	**SLT-25-100-P-A**	**197914**	**SLT-25-100-A-CC-B**
	125	**188422**	**SLT-25-125-P-A**	**197915**	**SLT-25-125-A-CC-B**
	150	**188423**	**SLT-25-150-P-A**	**197916**	**SLT-25-150-A-CC-B**
	200	**188424**	**SLT-25-200-P-A**	**197917**	**SLT-25-200-A-CC-B**

Mini slides SLS

Peripherals overview and type codes

Peripherals overview

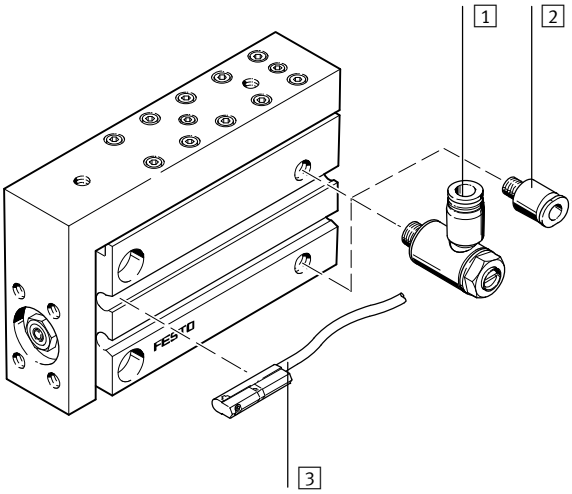

Accessories

		Description	➔ Page/Internet
1	One-way flow control valve GRLA	For speed regulation	38
2	Push-in fitting QS	For connecting compressed air tubing with standard external diameters	qs
3	Proximity sensor SME/SMT-10	Sensor slots for one or more proximity sensors	39

Type codes

SLS	–	16	–	10	–	P	–	A

Type

Double-acting	
SLS	Mini slide

Piston ∅ [mm]

Stroke [mm]

Cushioning

P	Flexible cushioning, non-adjustable

Position sensing

A	For proximity sensing

Mini slides SLS

Technical data

Function

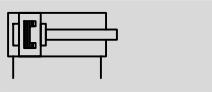

www.festo.com

Diameter
6 … 16 mm

Stroke length
5 … 30 mm

General technical data				
Piston ∅		6	10	16
Pneumatic connection		M5		
Design		Kinematic yoke system		
Guide		Via ball bearings		
Cushioning		Non-adjustable at either end		
Position sensing		For proximity sensing		
Type of mounting		Via through-holes		
		Via female thread		
Assembly position		Any		
Max. advancing speed	[m/s]	0.5[1)]	0.8	
Max. retracting speed	[m/s]	0.5[1)]	0.8	

1) Must be throttled externally

Operating and environmental conditions				
Piston ∅		6	10	16
Operating medium		Compressed air in accordance with ISO 8573-1:2010 [7:4:4]		
Note on operating/pilot medium		Operation with lubricated medium possible (in which case lubricated operation will always be required)		
Operating pressure	[bar]	1.5 … 10	1 … 10	
Ambient temperature[1)]	[°C]	−20 … +60		

1) Note operating range of proximity sensors

Forces [N] and impact energy [Nm]			
Piston ∅	6	10	16
Theoretical force at 6 bar, advancing	17	47	121
Theoretical force at 6 bar, retracting	13	39	104
Max. impact energy at the end positions[1)] Cushioning P[2)]	0.008	0.05	0.15

1) Loads moved by the slides must be taken into consideration for the calculation of end-position cushioning energy
2) Note also the graph illustrating piston speed as a function of working load ➔ 24

Weights [g]				
Piston ∅	Stroke	6	10	16
Product weight	5	97	130	225
	10	104	139	226
	15	113	149	256
	20	120	164	257
	25	131	182	291
	30	141	191	301
Moving load	5	28	41	92
	10	28	44	92
	15	32	49	100
	20	33	51	101
	25	37	60	111
	30	38	62	115

Materials

Sectional view

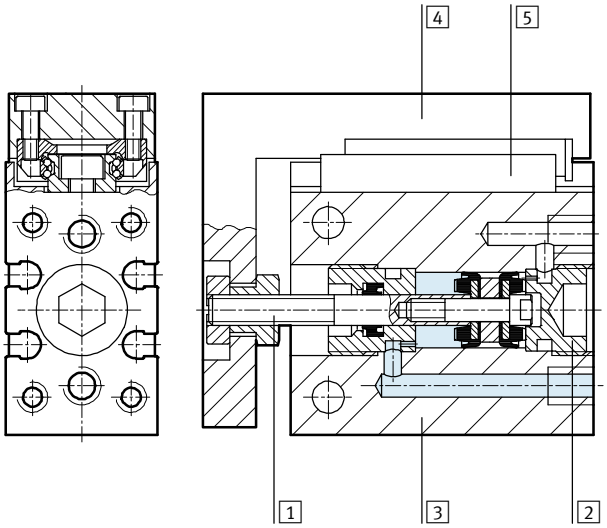

Mini slide		
1	Piston rod	High-alloy steel
2	Cap	Wrought aluminium alloy, anodised
3	Housing	Wrought aluminium alloy, anodised
4	Slide	Wrought aluminium alloy, anodised
5	Guide	Tempered steel
–	Seals	Thermoplastic rubber, hydrogenated nitrile rubber, nitrile rubber
	Note on materials	Free of copper and PTFE

Piston speed v as a function of working load m

SLS-6/-10/-16-...-P-A

The piston speed as a function of working load illustrated in this graph may not be exceeded as the kinetic impact or residual energy in the end positions can result in damage to the drive.

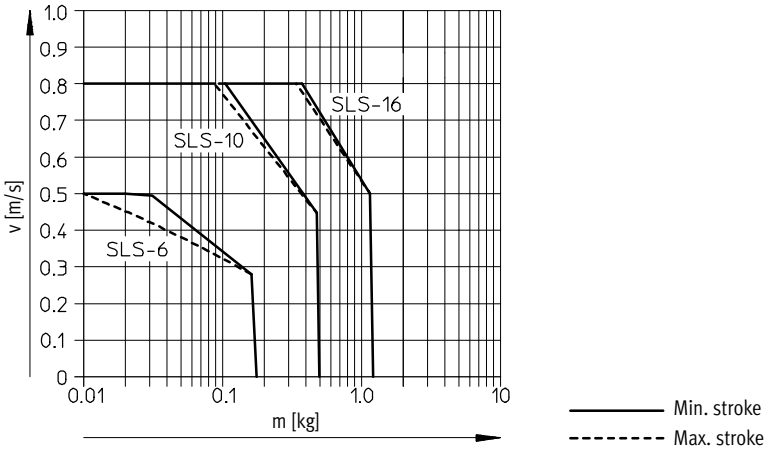

Dynamic characteristic load values

Torques are indicated with reference to the centre of the guide.
They must not be exceeded during dynamic operation. Special attention must be paid to the cushioning phase.

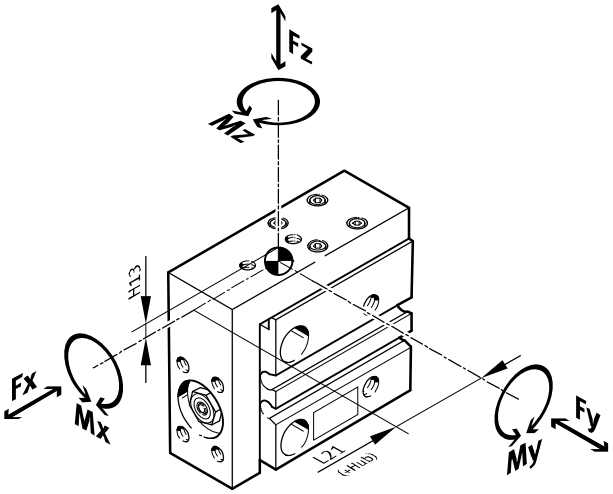

If the drive is simultaneously subjected to several of the indicated forces and torques, the following equation must be satisfied in addition to the indicated maximum loads.

$$\frac{|Fy|}{Fy_{max.}} + \frac{|Fz|}{Fz_{max.}} + \frac{|Mx|}{Mx_{max.}} + \frac{|My|}{My_{max.}} + \frac{|Mz|}{Mz_{max.}} \leq 1$$

Position of guide centre

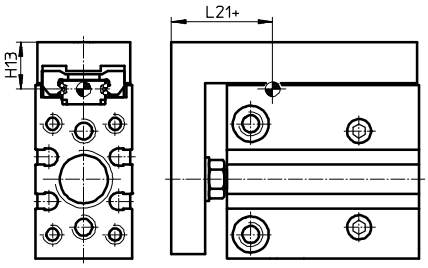

\+ plus stroke length

Permissible forces and torques						Geometric characteristics	
Piston ∅	Stroke	Fy_{max} [N]	Fz_{max} [N]	Mx_{max}, My_{max} [Nm]	Mz_{max} [Nm]	H13 [mm]	L21 [mm]
6							
	5	220	220	0.6	0.5	8.5	20.5
	10	170	170	0.6	0.5		20.5
	15	180	180	0.9	0.6		23
	20	160	160	0.9	0.6		23
	25	150	150	0.9	0.6		23
	30	140	140	0.9	0.6		23
10							
	5	220	220	0.6	0.5	10	27.5
	10	170	170	0.6	0.5		27.5
	15	170	170	1.1	0.7		36
	20	150	150	1.1	0.7		36
	25	140	140	1.1	0.7		36
	30	130	130	1.1	0.7		36
16							
	5	590	590	2.1	1.6	11	30.5
	10	470	470	2.1	1.6		30.5
	15	410	410	1.7	1.3		30.5
	20	370	370	1.7	1.3		30.5
	25	410	410	2.5	1.4		34
	30	390	390	2.5	1.4		34

Calculation example

Given:

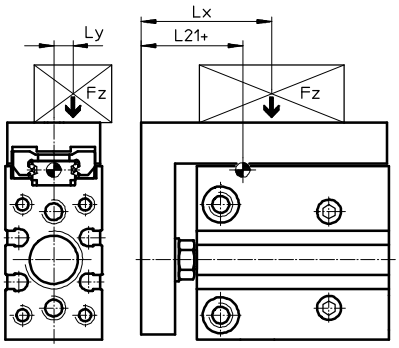

Mini slide	= SLS-10
Stroke length	= 20 mm
Lever arm L_x	= 5 mm
Lever arm L_y	= 20 mm
Mass F_z	= 0.495 kg
Acceleration a	= 0 m/s^2

To be found:

F_y, F_z, Mx, My, Mz and verification of function with combined load

Solution:

L21 = 36 mm from table

F_y = 0 N

F_z = m x g
= 0.495 kg x 9.81 m/s^2 = 4.856 N

M_x = m x g x L_y
= 0.495 kg x 9.81 m/s^2 x 20 mm = 0.097 Nm

M_y = m x g x [(L21+stroke)-L_x]
= 0.495 kg x 9.81 m/s^2 [(36 mm + 20 mm) – 5 mm] = 0.248 Nm

M_z = 0 Nm

Combined load:

$$\frac{|Fy|}{Fy_{max.}} + \frac{|Fz|}{Fz_{max.}} + \frac{|Mx|}{Mx_{max.}} + \frac{|My|}{My_{max.}} + \frac{|Mz|}{Mz_{max.}}$$

$$= 0 + \frac{4.856N}{150N} + \frac{0.097Nm}{1.1Nm} + \frac{0.248Nm}{1.1Nm} + 0 = 0.345 \leq 1$$

Dimensions Download CAD data ➔ **www.festo.com**

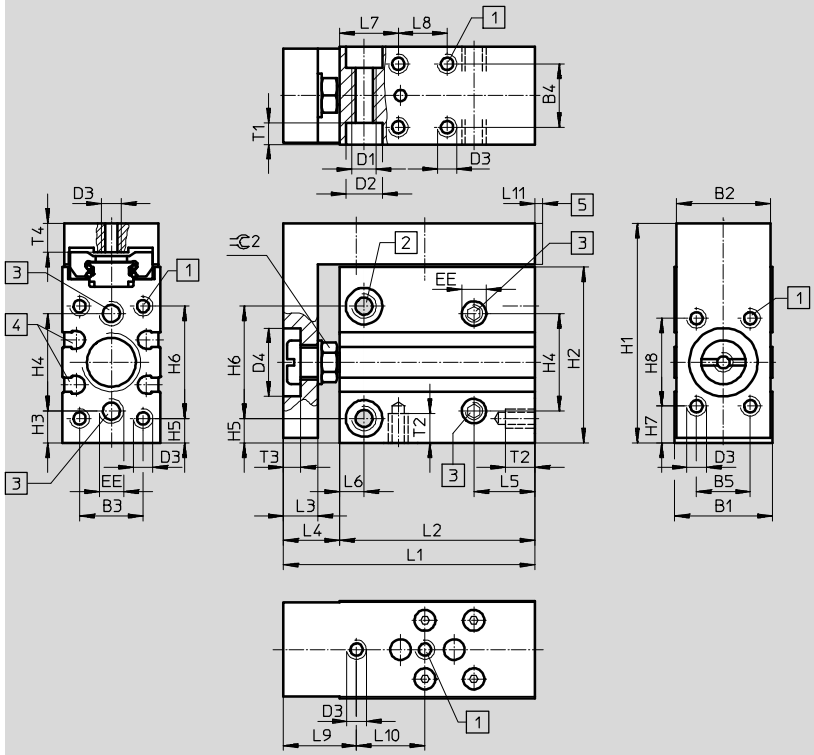

1 Mounting thread
2 Through and threaded holes for mounting the drive
3 Supply ports
4 Sensor slots for proximity sensor SME/SMT-10
5 Possible protrusion of the slide in relation to the edge of the housing

∅ [mm]	Stroke [mm]	B1	B2	B3	B4	B5	D1	D2 ∅	D3	D4 ∅ H11	EE	H1
6	5	16	15.3	10.5	10	9	M4	6	M3	12	M5	39
	10											
	15											
	20											
	25											
	30											
10	5	20	19.3	13	13	11	M5	7.5	M4	14	M5	45
	10											
	15											
	20											
	25											
	30											
16	5	24	23.3	17	17	16	M5	7.5	M4	19.5	M5	51
	10											
	15											
	20											
	25											
	30											

Mini slides SLS

Technical data

∅ [mm]	Stroke [mm]	H2	H3	H4	H5	H6	H7	H8	L1	L2	L3	L4	L5
6	5	31	6	17	5	19	7	15	46	37.5	6	8.5	10
	10								51	42.5			
	15								56	47.5			
	20								61	52.5			
	25								66	57.5			
	30								71	62.5			
10	5	36	6.5	20	5	23	7.5	18	51.5	40	7	11.5	12.5
	10								56.5	45			
	15								61.5	50			
	20								66.5	55			
	25								73.5	62			
	30								78.5	67			
16	5	41	6.5	25	5.5	27	6	26	66	52	10	14	12.5
	10												
	15								76	62			
	20												
	25								86	72			
	30								91	77			

∅ [mm]	Stroke [mm]	L6	L7	L8	L9	L10	L11	T1	T2	T3	T4	⊂⊃ 2
6	5	4	10	10	13	20	–	3.3	4.8	3	5	7
	10			15								
	15			20		25						
	20			25		30						
	25			30		40						
	30			35								
10	5	5	12	10	15	14	Max. 0.75	4.4	6	3.5	6	8
	10			14		19						
	15			18		25						
	20			24		30						
	25			32		40						
	30			35		45						
16	5	5	12	20	18	24	Max. 0.75	4.4	6	5	6	13
	10			20		35						
	15			30		45						
	20					50						
	25			40								
	30			45		55						

Ordering data			
∅ [mm]	Stroke [mm]	Part No.	Type
6			
	5	**170485**	**SLS-6-5-P-A**
	10	**170486**	**SLS-6-10-P-A**
	15	**170487**	**SLS-6-15-P-A**
	20	**170488**	**SLS-6-20-P-A**
	25	**170489**	**SLS-6-25-P-A**
	30	**170490**	**SLS-6-30-P-A**
10			
	5	**170491**	**SLS-10-5-P-A**
	10	**170492**	**SLS-10-10-P-A**
	15	**170493**	**SLS-10-15-P-A**
	20	**170494**	**SLS-10-20-P-A**
	25	**170495**	**SLS-10-25-P-A**
	30	**170496**	**SLS-10-30-P-A**
16			
	5	**170497**	**SLS-16-5-P-A**
	10	**170498**	**SLS-16-10-P-A**
	15	**170499**	**SLS-16-15-P-A**
	20	**170500**	**SLS-16-20-P-A**
	25	**170501**	**SLS-16-25-P-A**
	30	**170502**	**SLS-16-30-P-A**

Peripherals overview

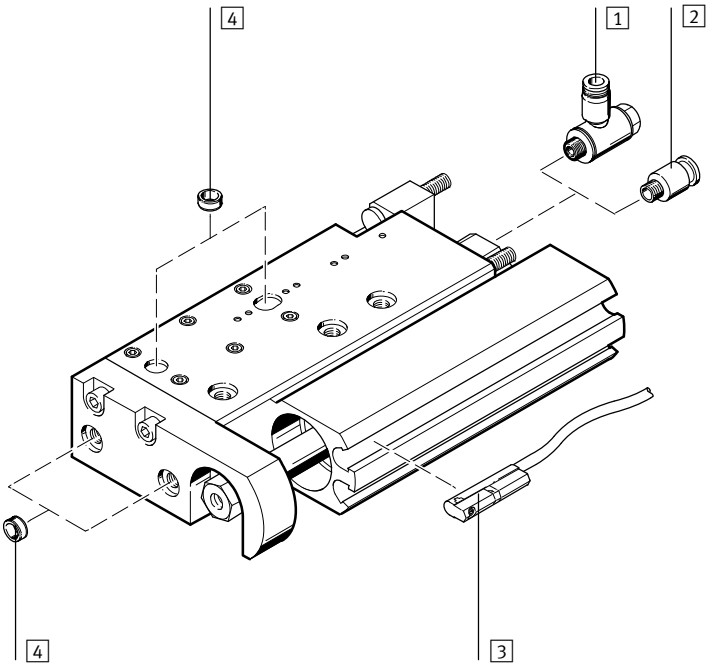

Note

End stops must not be removed.

Accessories

		Description	➔ Page/Internet
1	One-way flow control valve GRLA	For speed regulation	38
2	Push-in fitting QS	For connecting compressed air tubing with standard external diameters	qs
3	Proximity sensor SME/SMT-10	Sensor slots for one or more proximity sensors	39
4	Centring pin/sleeve ZBS/ZBH	For centring loads and attachments	38

Type codes

SLF	–	16	–	20	–	P	–	A

Type

Double-acting	
SLF	Mini slide

Piston ∅ [mm]

Stroke [mm]

Cushioning

P	Flexible cushioning, non-adjustable

Position sensing

A	For proximity sensor

Mini slides SLF

Technical data

Function

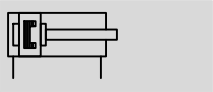

www.festo.com

Diameter
6 … 16 mm

Stroke length
10 … 80 mm

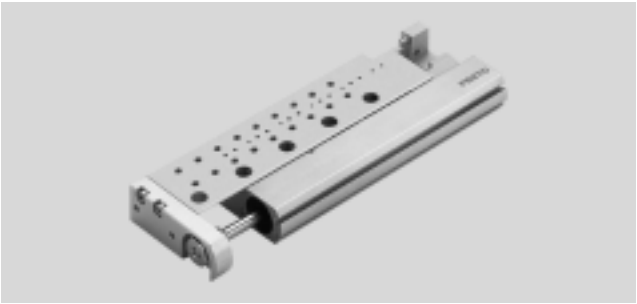

General technical data				
Piston ∅		6	10	16
Pneumatic connection		M5		
Design		Kinematic yoke system		
Guide		Via ball bearings		
Cushioning		Non-adjustable at either end		
Position sensing		For proximity sensing		
Type of mounting		Via through-holes		
		Via female thread		
Assembly position		Any		
Adjustable end-position range	Per end stop [mm]	5		
Max. advancing speed	[m/s]	0.5[1)]	0.8	
Max. retracting speed	[m/s]	0.5[1)]	0.8	

1) Must be throttled externally

Operating and environmental conditions				
Piston ∅		6	10	16
Operating medium		Compressed air in accordance with ISO 8573-1:2010 [7:4:4]		
Note on operating/pilot medium		Operation with lubricated medium possible (in which case lubricated operation will always be required)		
Operating pressure	[bar]	1.5 … 10	1 … 10	
Ambient temperature[1)]	[°C]	–20 … +60		

1) Note operating range of proximity sensors

Forces [N] and impact energy [Nm]				
Piston ∅		6	10	16
Theoretical force at 6 bar, advancing		17	47	121
Theoretical force at 6 bar, retracting		13	40	104
Max. impact energy at the end positions[1)]	Cushioning P[2)]	0.016	0.05	0.1

1) Loads moved by the slides must be taken into consideration for the calculation of end-position cushioning energy
2) Note also the graph illustrating piston speed as a function of working load ➔ 32

Weights [g]				
Piston ∅		6	10	16
Product weight	10	108	135	257
	20	124	156	291
	30	138	171	319
	40	–	178	353
	50		227	407
	80		–	539
Moving load	10	32	41	99
	20	37	48	109
	30	48	58	122
	40	–	60	133
	50		79	153
	80		–	199

Materials

Sectional view

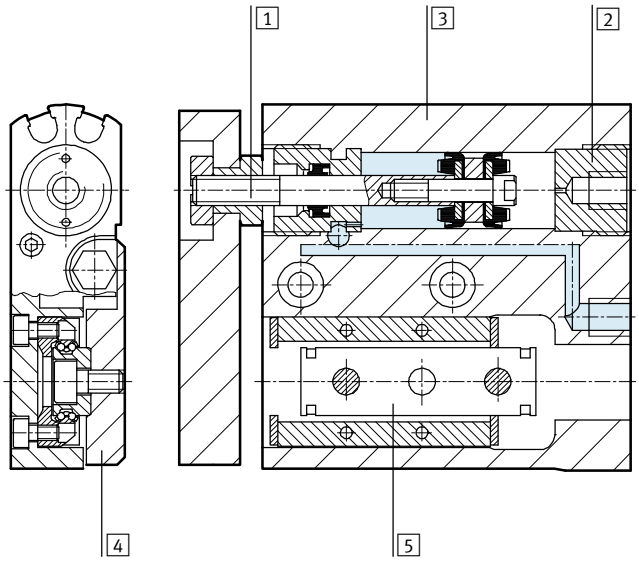

Mini slide		
1	Piston rod	High-alloy steel
2	Cap	Wrought aluminium alloy, anodised
3	Housing	Wrought aluminium alloy, anodised
4	Slide	Wrought aluminium alloy, anodised
5	Guide	Tempered steel
–	Seals	Thermoplastic rubber, hydrogenated nitrile rubber, nitrile rubber
	Note on materials	Free of copper and PTFE

Piston speed v as a function of working load m

SLF-6/-10/-16-...-P-A

The piston speed as a function of working load illustrated in this graph may not be exceeded as the kinetic impact or residual energy in the end positions can result in damage to the drive.

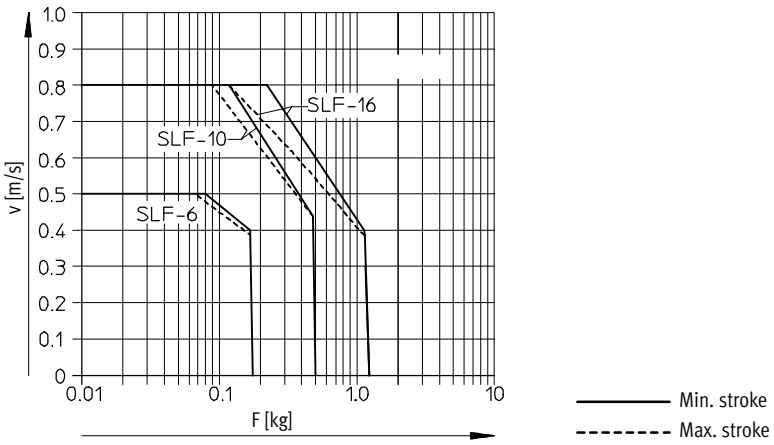

Characteristic load values

Torques are indicated with reference to the centre of the guide.
They must not be exceeded during dynamic operation. Special attention must be paid to the cushioning phase.

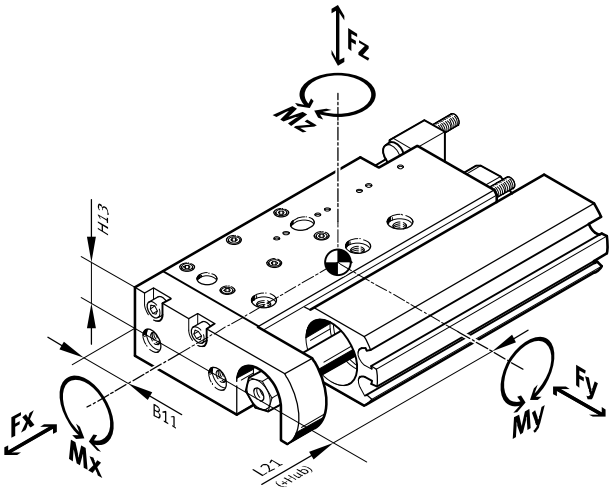

If the drive is simultaneously subjected to several of the indicated forces and torques, the following equation must be satisfied in addition to the indicated maximum loads.

$$\frac{|Fy|}{Fy_{max.}} + \frac{|Fz|}{Fz_{max.}} + \frac{|Mx|}{Mx_{max.}} + \frac{|My|}{My_{max.}} + \frac{|Mz|}{Mz_{max.}} \leq 1$$

Position of guide centre

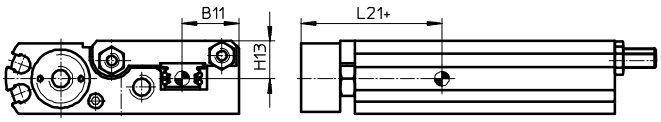

\+ plus stroke length

Permissible forces and torques						Geometric characteristics		
Piston ∅	Stroke	Fy_{max} [N]	Fz_{max} [N]	Mx_{max}, My_{max} [Nm]	Mz_{max} [Nm]	B11 [mm]	H13 [mm]	L21 [mm]
6								
	10	170	170	0.6	0.5	14	7	22
	20	150	150	1.1	0.7			21
	30	130	130	1.1	0.7			21
10								
	10	170	170	0.6	0.5	11.5	8	23
	20	150	150	1.1	0.7			25
	30	130	130	1.1	0.7			25
	40	150	150	0.9	0.5			29
	50	190	190	1.4	0.5			34.5
16								
	10	470	470	2.1	1.6	14	11.5	27.5
	20	370	370	1.7	1.3			27.5
	30	390	390	2.5	1.4			31.5
	40	350	350	2.2	1.3			31.5
	50	390	390	3.1	1.4			36
	80	410	410	4.3	1.5			43.5

Calculation example

Given:

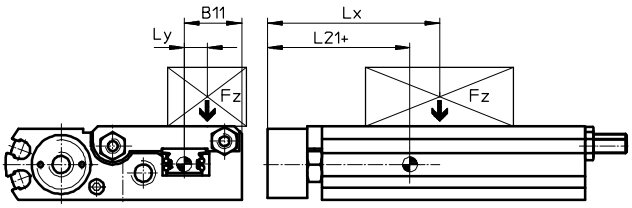

Mini slide	= SLF-10
Stroke length	= 20 mm
Lever arm L_x	= 5 mm
Lever arm L_y	= 20 mm
Mass F_z	= 0.495 kg
Acceleration a	= 0 m/s^2

To be found:

F_y, F_z, Mx, My, Mz and verification of function with combined load

Solution:

L21 = 25 mm from table

F_y = 0 N

F_z = m x g
= 0.495 kg x 9.81 m/s^2 = 4.856 N

M_x = m x g x L_y
= 0.495 kg x 9.81 m/s^2 x 20 mm = 0.097 Nm

M_y = m x g x [(L21+stroke)-L_x]
= 0.495 kg x 9.81 m/s^2 [(25 mm + 20 mm) – 5 mm] = 0.194 Nm

M_z = 0 Nm

Combined load:

$$\frac{|Fy|}{Fy_{max.}} + \frac{|Fz|}{Fz_{max.}} + \frac{|Mx|}{Mx_{max.}} + \frac{|My|}{My_{max.}} + \frac{|Mz|}{Mz_{max.}}$$

$$= 0 + \frac{4.856N}{150N} + \frac{0.097Nm}{1.1Nm} + \frac{0.194Nm}{1.1Nm} + 0 = 0.297 \leq 1$$

Dimensions Download CAD data ➔ **www.festo.com**

∅ 6

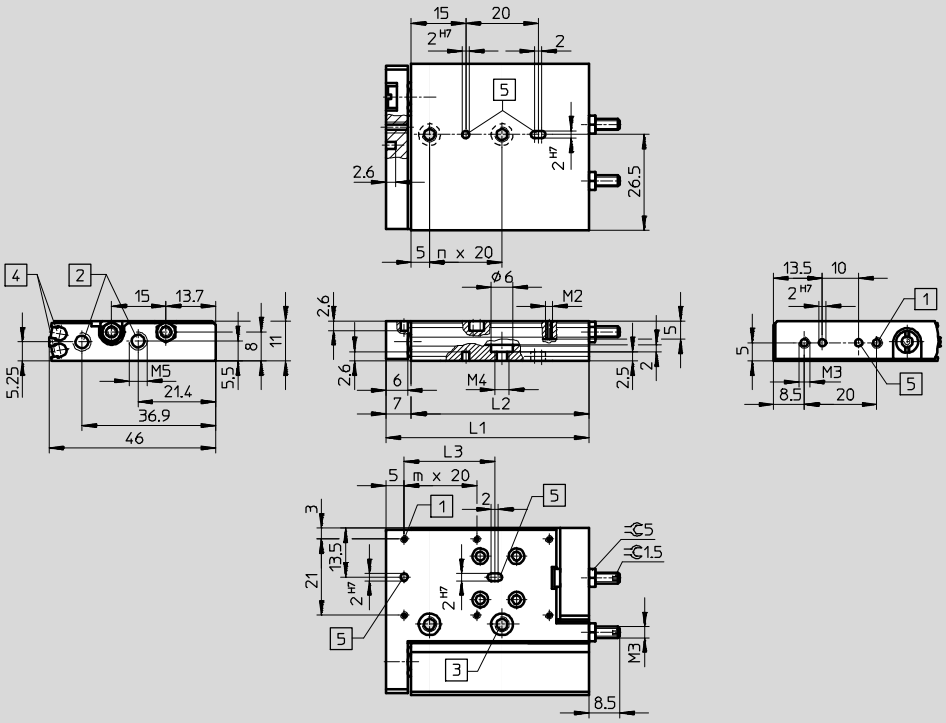

∅ [mm]	Stroke [mm]	L1	L2	L3	m	n
6	10	56	49	20	2	1
	20	66	59			2
	30	76	69	40	3	

Dimensions Download CAD data ➔ **www.festo.com**

∅ 10

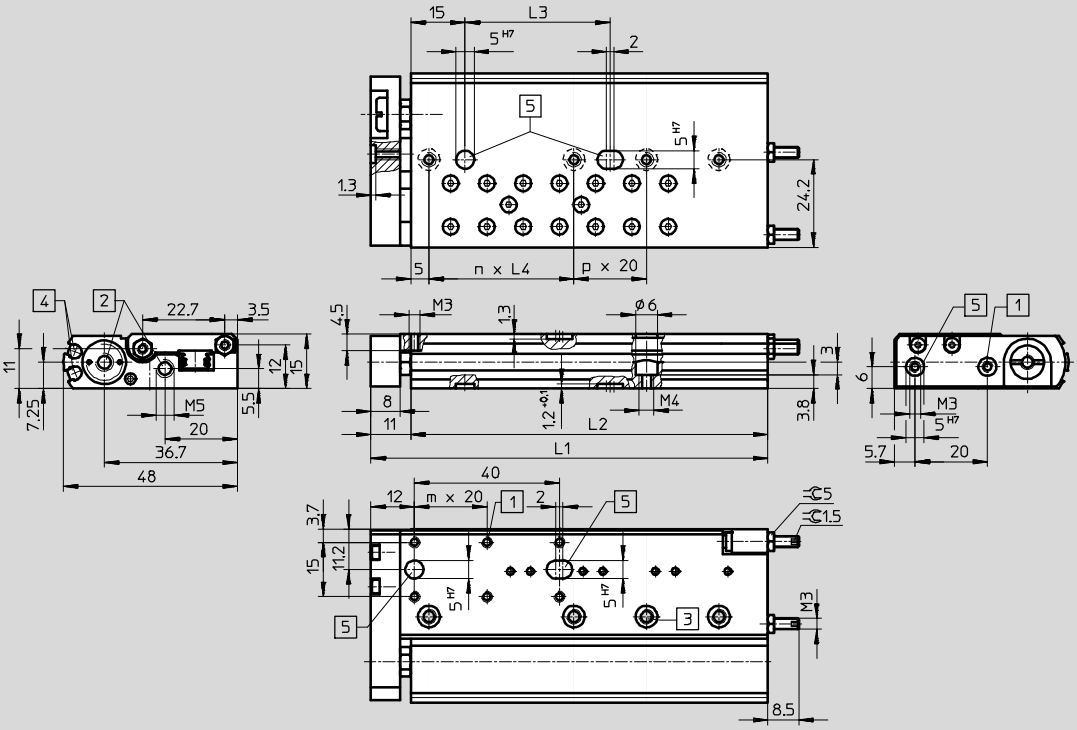

1 Mounting thread
2 Supply ports
3 Through-holes for mounting the drive
4 Sensor slots for proximity sensor SME/SMT-10
5 Centring holes (centring sleeves included in scope of delivery)

∅ [mm]	Stroke [mm]	L1	L2	L3	L4	m	n	p
10	10	59.5	48.5	20	20	1	1	–
	20	69.5	58.5					
	30	79.5	68.5			2	2	
	40	89.5	78.5	40			3	
	50	109.5	98.5		40		1	2

Dimensions Download CAD data ➔ **www.festo.com**

∅ 16

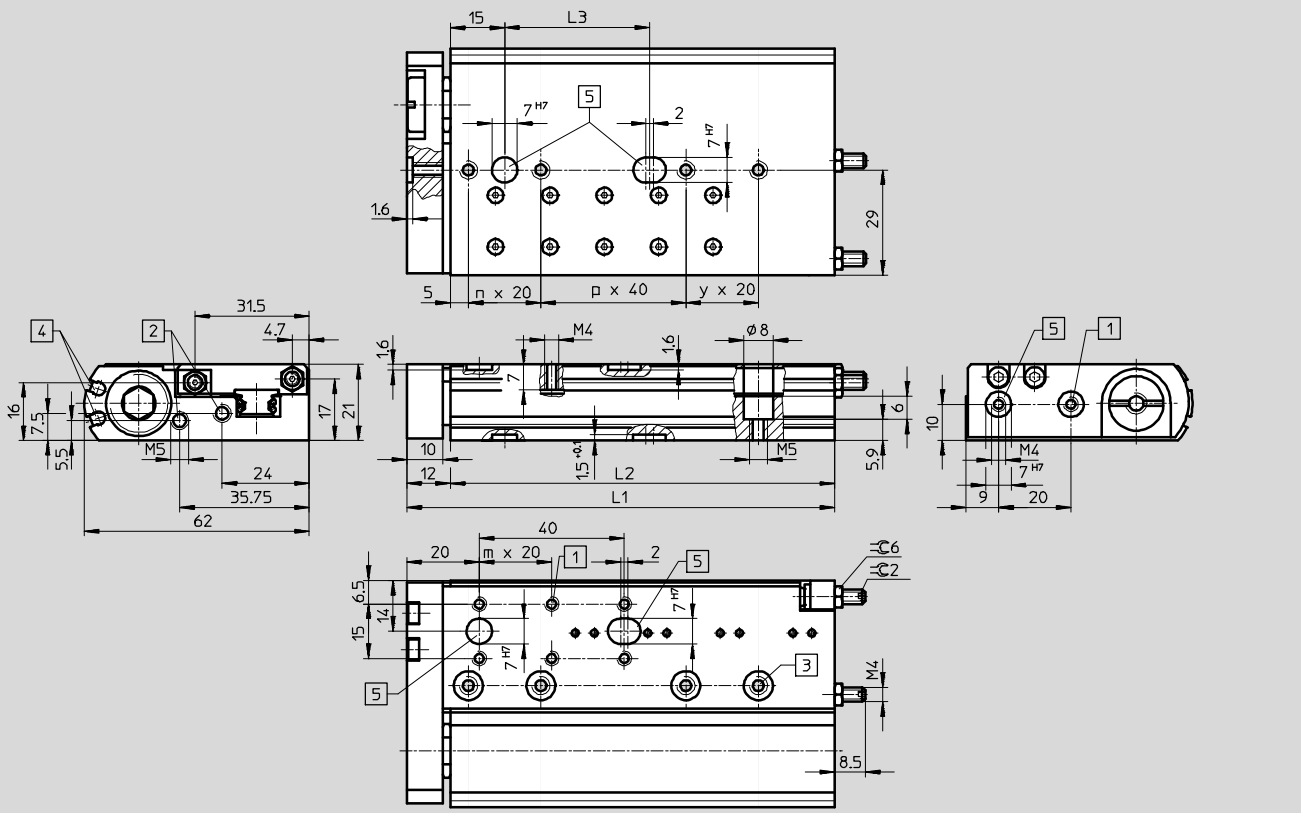

1 Mounting thread
2 Supply ports
3 Through-holes for mounting the drive
4 Sensor slots for proximity sensor SME/SMT-10
5 Centring holes (centring sleeves included in scope of delivery)

∅ [mm]	Stroke [mm]	L1	L2	L3	m	n	p	y
16	10	68	56	20	1	1	–	–
	20	78	66			2		
	30	88	76		2			
	40	98	86	40		3		
	50	118	106			1	1	1
	80	160	148				2	–

Ordering data			
∅ [mm]	Stroke [mm]	Part No.	Type
6			
	10	**170503**	**SLF-6-10-P-A**
	20	**170504**	**SLF-6-20-P-A**
	30	**170505**	**SLF-6-30-P-A**
10			
	10	**170506**	**SLF-10-10-P-A**
	20	**170507**	**SLF-10-20-P-A**
	30	**170508**	**SLF-10-30-P-A**
	40	**170509**	**SLF-10-40-P-A**
	50	**170510**	**SLF-10-50-P-A**
16			
	10	**170511**	**SLF-16-10-P-A**
	20	**170512**	**SLF-16-20-P-A**
	30	**170513**	**SLF-16-30-P-A**
	40	**170514**	**SLF-16-40-P-A**
	50	**170515**	**SLF-16-50-P-A**
	80	**170516**	**SLF-16-80-P-A**

Ordering data											
		6		10		16		20		25	
		Part No.	Type	Part No.	Type	Part No.	Type	Part No.	Type	Part No.	Type
Centring pins/sleeves for SLT[1]											Technical data ➔ Internet: zbh
	Housing	**189652**	**ZBH-5**	**186717**	**ZBH-7**	**150927**	**ZBH-9**	**189653**	**ZBH-12**	**189653**	**ZBH-12**
	Slide	**189652**	**ZBH-5**	**189652**	**ZBH-5**	**189652**	**ZBH-5**	**150927**	**ZBH-9**	**189653**	**ZBH-12**
	Yoke	**525273**	**ZBS-2**	**189652**	**ZBH-5**	**186717**	**ZBH-7**	**150927**	**ZBH-9**	**189653**	**ZBH-12**
Centring pins/sleeves for SLF[1]											Technical data ➔ Internet: zbh
	Housing	**525273**	**ZBS-2**	**189652**	**ZBH-5**	**186717**	**ZBH-7**	–		–	
	Slide										
	Yoke										
Stop, metallic for SLT-...-P-A[2]											
	–	**539278**	**PF-6-SLT**	**539279**	**PF-10-SLT**	**539280**	**PF-16-SLT**	**539281**	**PF-20-SLT**	**539282**	**PF-25-SLT**

1) Scope of delivery: 10 per pack
2) Scope of delivery: 2 per pack

Ordering data – One-way flow control valves					Technical data ➔ Internet: grla
	Connection		Material	Part No.	Type
	Thread	For tubing O.D.			
	M5	3	Metal design	**193137**	**GRLA-M5-QS-3-D**
		4		**193138**	**GRLA-M5-QS-4-D**
	G⅛	4		**193143**	**GRLA-⅛-QS-4-D**
		6		**193144**	**GRLA-⅛-QS-6-D**

Ordering data – Proximity sensors for C-slot, magneto-resistive						Technical data ➔ Internet: smt
	Type of mounting	Switch output	Electrical connection, connection direction	Cable length [m]	Part No.	Type
N/O contact						
	Insertable in the slot from above	PNP	Cable, 3-wire, in-line	2.5	**551373**	**SMT-10M-PS-24V-E-2,5-L-OE**
			Plug M8x1, 3-pin, in-line	0.3	**551375**	**SMT-10M-PS-24V-E-0,3-L-M8D**
			Plug M8x1, 3-pin, lateral	0.3	**551376**	**SMT-10M-PS-24V-E-0,3-Q-M8D**

Ordering data – Proximity sensors for C-slot, magnetic reed						Technical data ➔ Internet: sme
	Type of mounting	Switch output	Electrical connection, connection direction	Cable length [m]	Part No.	Type
N/O contact						
	Insertable in the slot from above	Contacting	Plug M8x1, 3-pin, in-line	0.3	**551367**	**SME-10M-DS-24V-E-0,3-L-M8D**
			Cable, 3-wire, in-line	2.5	**551365**	**SME-10M-DS-24V-E-2,5-L-OE**
			Cable, 2-wire, in-line	2.5	**551369**	**SME-10M-ZS-24V-E-2,5-L-OE**
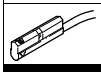	Insertable in the slot lengthwise	Contacting	Plug M8x1, 3-pin, in-line	0.3	**173212**	**SME-10-SL-LED-24**
			Cable, 3-wire, in-line	2.5	**173210**	**SME-10-KL-LED-24**

Ordering data – Connecting cables					Technical data ➔ Internet: nebu
	Electrical connection, left	Electrical connection, right	Cable length [m]	Part No.	Type
	Straight socket, M8x1, 3-pin	Cable, open end, 3-wire	2.5	**541333**	**NEBU-M8G3-K-2.5-LE3**
			5	**541334**	**NEBU-M8G3-K-5-LE3**
	Angled socket, M8x1, 3-pin	Cable, open end, 3-wire	2.5	**541338**	**NEBU-M8W3-K-2.5-LE3**
			5	**541341**	**NEBU-M8W3-K-5-LE3**

Adapter kit
HAPS

Material:
Wrought aluminium alloy
Free of copper and PTFE
RoHS-compliant

Note
The kit includes the individual mounting interface as well as the necessary mounting material.

Permissible drive/drive combinations with adapter kit

Download CAD data ➔ **www.festo.com**

Combination	1 Drive	2 Drive	Adapter kit				
	Size	Size	CRC[1]	Part No.	Type	Required quantity	PU[2]
SLT/SLT	SLT	SLT					
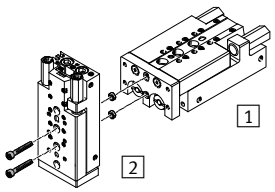	10	6	2	–	**M3x20 DIN 912**[3]	2	–
				189652	**ZBH-5**[4]	2	10
	16	10		–	**M4x25 DIN 912**[3]	2	–
				186717	**ZBH-7**[4]	2	10
	20	16		–	**M5x30 DIN 912**[3]	2	–
				150927	**ZBH-9**[4]	2	10
	25	20		–	**M6x40 DIN 912**[3]	2	–
				189653	**ZBH-12**[4]	2	10
SLTE/SLT	SLTE	SLT					
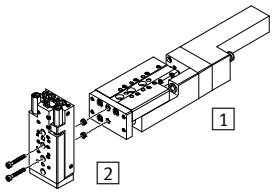	10	6	2	–	**M3x20 DIN 912**[3]	2	–
				189652	**ZBH-5**[4]	2	10
	16	10		–	**M4x25 DIN 912**[3]	2	–
				186717	**ZBH-7**[4]	2	10
SLG/SLT	SLG	SLT	HAPS				
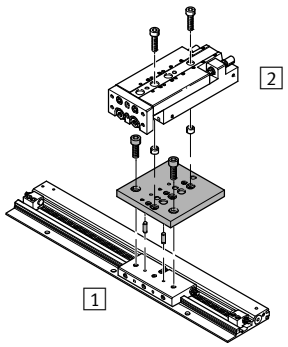	8	6	2	**189533**	**HAPS-11**	1	1
	12	6, 10		**189533**	**HAPS-11**	1	1
	18	10, 16		**189534**	**HAPS-12**	1	1

1) Corrosion resistance class CRC 2 to Festo standard FN 940070
Moderate corrosion stress. Indoor applications in which condensation may occur. External visible parts with primarily decorative requirements for the surface and which are in direct contact with the ambient atmosphere typical for industrial applications.
2) Packaging unit quantity
3) The screws listed are not included in the scope of delivery of the drives
4) The centring sleeves are included in the scope of delivery of the drives

Adapter kit
HMSV

Material:
Wrought aluminium alloy
Free of copper and PTFE
RoHS-compliant

Note
The kit includes the individual mounting interface as well as the necessary mounting material.

Permissible drive/drive combinations with adapter kit

Download CAD data ➔ **www.festo.com**

Combination	1 Drive	2 Drive	Adapter kit				
	Size	Size	CRC[1]	Part No.	Type	Required quantity	PU[2]
DGC/SLT	DGC	SLT	HMSV				
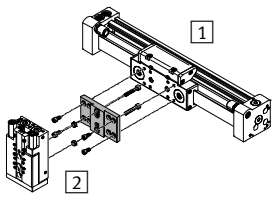	18	10	2	**189656**	**HMSV-40**	1	1
	18	16		**189657**	**HMSV-41**	1	1
	25	16		**189658**	**HMSV-42**	1	1
	25	20		**189659**	**HMSV-43**	1	1
	32	20		**189660**	**HMSV-44**	1	1
	32	25		**189661**	**HMSV-45**	1	1
DGP(I)L, DGE/SLT	DG...	SLT	HMSV				
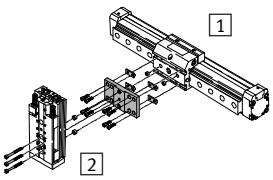	18	10	2	**189656**	**HMSV-40**	1	1
	18	16		**189657**	**HMSV-41**	1	1
	25	16		**189658**	**HMSV-42**	1	1
	25	20		**189659**	**HMSV-43**	1	1
	32	20		**189660**	**HMSV-44**	1	1
	32	25		**189661**	**HMSV-45**	1	1

1) Corrosion resistance class CRC 2 to Festo standard FN 940070
Moderate corrosion stress. Indoor applications in which condensation may occur. External visible parts with primarily decorative requirements for the surface and which are in direct contact with the ambient atmosphere typical for industrial applications.
2) Packaging unit quantity

Adapter kit
HAPS

Material:
Wrought aluminium alloy
Free of copper and PTFE
RoHS-compliant

Note
The kit includes the individual mounting interface as well as the necessary mounting material.

Permissible drive/drive combinations with adapter kit Download CAD data ➔ **www.festo.com**

Combination	1 Drive	2 Drive	Adapter kit				
	Size	Size	CRC[1]	Part No.	Type	Required quantity	PU[2]
SLG/SLF	SLG	SLF	HAPS				
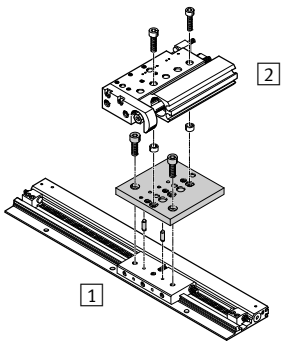	8, 12	6, 10	2	**189533**	**HAPS-11**	1	1
	12	16		**189533**	**HAPS-11**	1	1
	18	10, 16		**189534**	**HAPS-12**	1	1

1) Corrosion resistance class CRC 2 to Festo standard FN 940070
Moderate corrosion stress. Indoor applications in which condensation may occur. External visible parts with primarily decorative requirements for the surface and which are in direct contact with the ambient atmosphere typical for industrial applications.
2) Packaging unit quantity